Product Training Manual

for

Brass Products

designed for

KBR

$5.95

TABLE OF CONTENTS

Fitting Identification **Page**

Course Outline 1
Glossary 2-5
Safety Information 6
Thread Size Comparison Chart 7
Metric Fitting Identification 8-9
BSPP and BSPT Fitting Identification 10
Standard Fitting Identification 11-20
Brass Gauge Instructions 21
Pipe Thread Identification 22
Weatherhead Numbering Systems 23

BRASS AND STEEL FITTING COURSE OUTLINE

PURPOSE:
To have technicians understand how to identify brass and steel products quickly and easily for proper applications and use.

OBJECTIVES: Technicians will be able to:

- Identify brass and steel fittings by category, body style, or shape and size.
- Demonstrate and use brass charts to identify product
- Measure brass fittings using gauges and charts
- Measure tube and hose size accurately
- Identify proper fitting for each application

I. Glossary
II. Important Safety Information
III. Identification and Measurement of Brass and Steel Fittings
a. Fitting Thread Size Comparison Chart
b. Metric Fitting Identification
c. BSPP and BSPT Fittings
d. Non-DOT Compression Fittings
e. Mini-Barb® Fittings
f. Polyline® Flareless
g. Inverted Flare
h. SAE 45º Flare
i. DOT Air Brake-Nylon Tubing
j. DOT Push>Connect®
k. DOT Air Brake-Copper Tubing
l. JIC 37º Flare Twin®
m. For-Seal®
IV. Brass Gauge Instructions
V. Identification and Measurement of Pipe Fittings
VI. Weatherhead Numbering Systems

PHONE: 1-800-558-2808 FAX: 1-800-553-8769 WEB: www.imperialsupplies.com

I. GLOSSARY

A

ABS: Air Brake Swivel

Adapter, Adaptor: 1) Fittings of various sizes and materials used to change an end fitting from one type to another type or one size to another. (i.e., male SAE to male pipe adapter is often attached to a female SAE to create a male end union fitting); 2) the grooved portion of a cam & groove coupling.

ANSI: American National Standards Institute.

ASTM: American Society of Testing and Materials.

B

Barb: The portion of a fitting (coupler) that is inserted into the hose, usually comprised of two or more radial serrations or ridges designed to form a redundant seal between the hose and fitting.

Brass: A family of copper/zinc alloys.

BSPP/BSPT: British Standard Pipe Parallel / British Standard Pipe Tapered.

C

Collar: 1) The portion of a fitting that is compressed by crimping to seal the hose onto the fitting barbs and create a permanent attachment; also called a ferrule. (With field attachable fittings, the lock and seal are accomplished mechanically by a collar without crimping); 2) a raise portion on the hose shank which functions as a connection for a ferrule or other locking device or functions as a hose stop.

Checking: The short, shallow cracks on the surface of a rubber product resulting from damaging action of environmental conditions.

Corrosion Resistance: Ability of metal components to resist oxidation.

D

DOT: Department of Transportation

DIN: Deutsch Industrie Norme

E

EMDM: Ethylene Propylene Diene Monomer; an elastomer.

Extrude/Extruded/Extrusion: Forced through the shaping die of an extruder; extrusion may have a solid of hollow cross section.

PHONE: 1-800-558-2808 FAX: 1-800-553-8769 WEB: www.imperialsupplies.com

F

Fatigue: The weakening or deterioration of a material occurring when a repetitious or continuous application of stress caused stain, which could lead to failure.

FDA: United Food and Drug Administration

Fitting/Coupling: A devise attached to the end of the hose to facilitate connection.

- **Compression Fitting:** A fitting style that seals on a mating tube by compressing an internal ferrule against the tube O.D.

- **Inverted Flare Fitting:** A fitting consisting of a male or female nut, trapped on a tube by flaring the end of the tube material to either 37 or 45 degrees.

- **JIC Fittings:** Joint Industrial Council (no longer in existence). An engineering group that established an industry standard fitting design incorporating a 37 degree mating surface, male female styles. These standards are now governed by SAE.

- **O-ring Fittings:** A fitting that seals by means of an elastomeric ring of a specified material.

- **Pipe Thread Fittings -**

  NPT- National Pipe Taper. Pipe thread per ANSI B1.20.3

  NPTF- National Pipe Tapered for Fuel. (Same as above except dry-seal per ANSI B1.20.3)

  NPSH- National Pipe Straight Hose per ANSI B1.20.7

  NPSM- National Pipe Straight Mechanical. Straight thread per ANSI B1.20.1

  NPSL- National Pipe Straight Loosefit per ANSI B1.20.1

  BSPP, BSPT- British Standard Pipe Parallel, British Standard Pipe Taper. BS21

  Quick Connect Fitting- A fitting designed to quickly connect and disconnect. These fittings come in many styles and types.

  Tube Fitting- A hose fitting of which the mating end conforms to a tube diameter. The mate or male end of a compression fitting.

FOR-SEAL®: A product name for a hose end configuration using an o-ring sealing method, trademarked by Dana Corporation.

G

GPM: Gallons per minute.

H

Hose: A flexible conduit consisting of a tube, reinforcement, and usually an outer cover.

I

I.D.: The abbreviation for inside diameter.

Insert: Optional term for nipple.

Interlocking Ferrule: A ferrule, which physically attaches to the fitting preventing the ferrule from sliding off the fitting.

ISO: International Organization of Standardization.

L

Layline: The line of printed information that runs parallel on the side of a manufactured hose giving details such as part number, PSI rating, hose size and manufacturing data.

N

Nipple: The internal member or portion of a hose fitting.

Nitrile Rubber (NB/Buna-N): A family of acrylonitrile elastomers used extensively for industrial hose.

Nominal: A size indicator for reference only.

NPT/NPTF: Abbreviation for national pipe thread.

Nylon: A family of polyimide material.

O

Operating Conditions: The pressure, temperature, motion, and environment to which a hose assembly is subject.

Overall Length (OAL): The total length of a hose assembly, which consists of the free hose length plus the length of the coupling(s).

P

Permanent Fitting: The type of fitting which, once installed, may not be removed.

Plating: A material, usually metal, applied to another metal by electroplating, for the purpose of reducing corrosion: typically a more noble metal such as zinc is applied to steel.

Pressure, Burst: The pressure at which rupture occurs.

Pressure, Working: The maximum pressure to which a hose will be subjected, including the momentary surges in pressure, which can occur during service. Abbreviated as WP.

PSI: Pounds per square inch.

PVC: Polyvinyl chloride. A low cost thermoplastic material typically used in the manufacture of industrial hose. The operating temperature range is -500 degrees Fahrenheit to +1750 degrees Fahrenheit.

Q

Quick>Connect: A reusable easy to assemble air brake fitting used on NT100 series tubing. This fitting meets D.O.T. performance requirements.

R

Reinforcement: The strengthening members, consisting of fabric, cord, and/or metal, of a hose.

S

SAE: Society of Automotive Engineers.

Shank: The portion of the fitting, which is inserted into the bore of a hose.

Sleeve: A metal cylinder, which is not physically attached to the fitting, for the purpose of forcing the hose into the serrations of the fitting.

Surge (Spike): A rapid and transient rise in pressure.

W

WP: The abbreviation for working pressure.

⚠ WARNING

Selection of Tubing

Selecting the proper Weatherhead tubing for a given application is essential to the proper operation and safe use of the tubing and related equipment. Inadequate attention to the selection of the tubing for your application can result in leakage, bursting, or other failure which can cause serious bodily injury or property damage from spraying fluids or flying projectiles. In order to avoid serious bodily injury or property damage resulting from selection of the wrong tubing, you should carefully review the information in this catalog. Some of the factors that are involved in the selection of the proper tubing are:

- material of tubing
- tubing size
- tubing length
- tubing end connections
- fluid conveyed (compatibility)
- bends
- temperature
- tubing pressure rating
- installation design

These factors and the other information in this catalog should be considered by you in selecting the proper tubing for your application. If you have any questions regarding the proper tubing for your application, please contact Boston Weatherhead, Technical Support 1-800-776-3262.

Proper Selection of Tube Fittings

Selection of the proper Weatherhead tube fittings for the application is essential to the proper operation and safe use of tubing and related equipment. Inadequate attention to the selection of the end fittings for your application can result in tube leakage, bursting, or other failure which can cause serious injury or property damage from spraying fluids or flying projectiles. In order to avoid serious bodily injury or property damage resulting from selection of the wrong tube end fitting, you should carefully review the information in this catalog. Some of the factors which are involved in the selection of the proper tube end fittings are:

- tube fitting
- compatibility with tubing
- temperature
- installation design
- tubing size
- corrosion requirements

These factors and the other information in this catalog should be considered by you in selecting the proper tube end fitting for your application.

If you have any questions regarding the proper tube end fittings for your application, please contact Boston Weatherhead, Technical Support at 1-800-776-3262.

Source: **EATON Weatherhead** Tube and Pipe Fitting Master Catalog W-HYOV-MC001-E March 2003

III. IDENTIFICATION & MEASUREMENT OF BRASS & STEEL FITTINGS

Application — Fitting Identification

a) Fitting Thread Size Comparison Chart – The male connections have (Male unified thread class 2 fit) UN-2A specification threads and the female connections have (Female unified thread class 2 fit) UN-2B specification threads. The exceptions are male and female pipe threads.

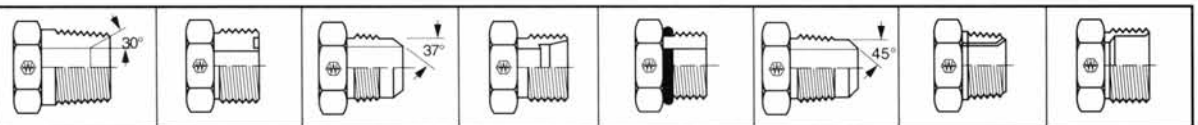

Size	Pipe Size	FOR-SEAL®	37° Flare Flare-Twin®	Ermeto® 7000 Series	Straight Thread O-Ring SAE	45° Flare	Inverted Flare	Compression
1/16	1/16–27	–	–	–	–	–	–	–
1/8	1/8–27	–	5/16–24	5/16–24	5/16–24	5/16–24	5/16–28	5/16–24
3/16	–	–	3/8–24	3/8–24	3/8–24	3/8–24	3/8–24	3/8–24
1/4	1/4–18	9/16–18	7/16–20	7/16–20	7/16–20	7/16–20	7/16–24	7/16–24
5/16	–	–	1/2–20	1/2–20	1/2–20	1/2–20	1/2–20	1/2–24
3/8	3/8–18	11/16–16	9/16–18	9/16–18	9/16–18	5/8–18	5/8–18	9/16–24
7/16	–	–	–	–	–	11/16–16	11/16–18	5/8–24
1/2	1/2–14	13/16–16	3/4–16	3/4–16	3/4–16	3/4–16	3/4–18	11/16–20
5/8	–	1–14	7/8–14	7/8–14	7/8–14	7/8–14	7/8–18	13/16–18
3/4	3/4–14	1-3/16–12	1-1/16–12	1-1/16–12	1-1/16–12	1-1/16–14	1-1/16–16	1–18
7/8	–	1-3/16–12	1-3/16–12	1-3/16–12	1-3/16–12	–	1-3/16–16	–
1	1–11-1/2	1-7/16–12	1-5/16–12	1-5/16–12	1-5/16–12	–	1-5/16–16	1-1/4–18
1-1/4	1-1/4–11-1/2	1-11/16–12	1-5/8–12	1-5/8–12	1-5/8–12	–	–	–
1-1/2	1-1/2–11-1/2	2–12	1-7/8–12	1-7/8–12	1-7/8–12	–	–	–
2	2–11-1/2	2-1/2–12	2-1/2–12	2-1/2–12	2-1/2–12	–	–	–

ACTUAL PIPE THREAD SIZES

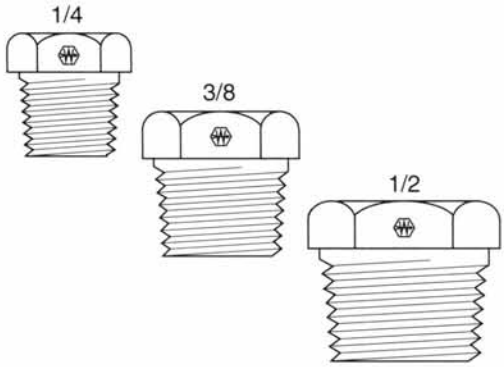

PIPE FITTINGS

The Society of Automotive Engineers in cooperation with industry set up a standard for improvement in pipe threads. This improvement is known as the Dryseal Pipe Thread. All Weatherhead pipe threads are Dryseal American Standard Tapered Pipe Threads (NPTF). The metal to metal seal is formed by contact at the thread crest and root.

Nominal pipe sizes do not agree with either the I.D., O.D., or thread sizes. To determine pipe size (up to 1-1/4") measure the diameter of the threads and subtract 1/4". For example, subtract 1/4" from a 1" thread O.D. to obtain the nominal pipe size of 3/4".

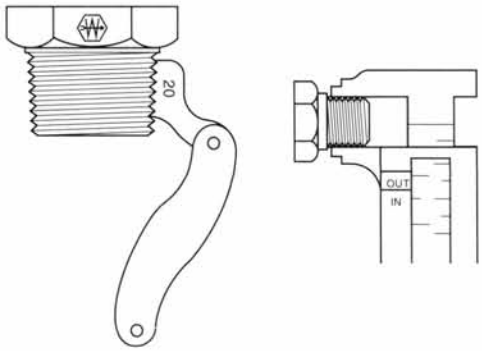

TUBE FITTINGS

There are four basic types of tube fittings; Flare, Flareless, Straight Thread O-Ring, and Flat Face O-Ring Seal (FOR-SEAL®). Tube fittings seal in two ways. Flare and Flareless fittings use metal to metal contact joints. Straight Thread O-Ring and Flat Face O-Ring fittings use a rubber O-Ring. Where extreme vibration is present, use Flareless, Straight Thread or Flat Face O-Ring Seal fittings.

SIZING: For accuracy, it is recommended the male thread be measured. Measure the outside diameter. For our example use 7/16". Next measure the threads per inch, use 20. Our fitting size measures 7/16-20. Refer to the thread chart above for appropriate tube size and illustration.

Source: **EATON Weatherhead** Tube and Pipe Fitting Master Catalog W-HYOV-MC001-E March 2003

PHONE: 1-800-558-2808 FAX: 1-800-553-8769 WEB: www.imperialsupplies.com

b) Metric Fitting Identification

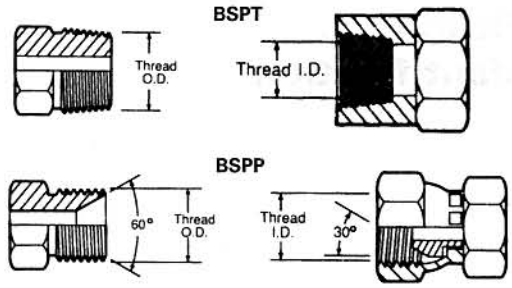

Figure 4.

Identifying BSP threads starts with determining if it is a parallel or tapered thread. Next, referencing Figure 4 and 4a, measure the lead thread diameter. Compare this measurement to the listed dimensions to determine size. If instruments are not available to measure this, you can compare it end-to-end with a known NPTF thread to approximately arrive at the nominal BSP size. Finally, measure the pitch and compare it to the chart on Figure 4 to complete the identification. These dimensions will be the same for both BSPP and BSPT.

Metric Threads

Metric threads are similar to inch-sized threads except for the sizing which is based on standard metric units. Identifying metric threads starts with determining if it is a parallel or tapered thread. Next, measure the thread diameter. Compare this measurement to the dimensions listed in Figure 5 to determine size. Finally, measure the pitch and compare to chart. These dimensions will be common for both parallel and tapered threads.

DIN 3901/3902L, 3901/3902S

The most popular metric flareless, or bite-type, fitting style is the 24° Metric Tube Seat. This style incorporates a tapered seat in the fitting body with a bite-type sleeve, or ferrule, for the connection. When the nut is tightened, the tapered seat forces the sleeve into the tube creating a positive seal. This style of connection is available in both a Light and Heavy series and is designed for medium and high pressure applications respectively. The two series have different parallel thread sizes in relationship to the nominal tube outside diameter, but share a common sleeve. This style can be identified by the combination of the 24° internal seat and a male metric parallel thread. The series can be determined by measuring the seat counterbore, which is the approximate tube outside diameter, and comparing it to the thread size. Compare these di-mensions to those shown in Figure 6 to determine the series. The nominal sleeve size is taken directly from the tube outside diameter dimension.

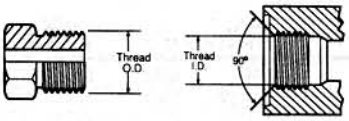

METRIC THREAD SIZE	MALE THREAD DIAMETER		FEMALE THREAD DIAMETER		PITCH	
	MM	IN	MM	IN	MM	IN
M10 x 1.0	10.0	.394	8.5	.335	1.0	.039
M12 x 1.5	12.0	.472	10.5	.413	1.5	.059
M14 x 1.5	14.0	.551	12.5	.492	1.5	.059
M16 x 1.5	16.0	.630	15.5	.610	1.5	.059
M18 x 1.5	18.0	.709	16.5	.650	1.5	.059
M20 x 1.5	20.0	.787	18.5	.728	1.5	.059
M22 x 1.5	22.0	.866	20.5	.807	1.5	.059
M24 x 1.5	24.0	.945	22.5	.886	1.5	.059
M26 x 1.5	26.0	1.024	24.5	.964	1.5	.059
M27 x 2.0	27.0	1.063	25.5	1.004	2.0	.079
M30 x 2.0	30.0	1.181	28.5	1.122	2.0	.079
M33 x 2.0	33.0	1.299	31.5	1.240	2.0	.079
M36 x 2.0	36.0	1.417	34.5	1.358	2.0	.079
M42 x 2.0	42.0	1.653	40.5	1.594	2.0	.079

Figure 5.

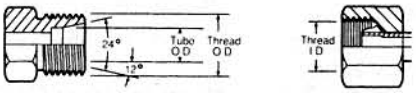

TUBE O.D.		NOM. O.D.	SERIES–THREAD	
MM	IN	(MM)	LIGHT - l.Rh.	HEAVY - s.Rh.
8	.315	8	M14 x 1.5	M16 x 1.5
10	.394	10	M16 x 1.5	M18 x 1.5
12	.472	12	M18 x 1.5	M20 x 1.5
14	.551	14	—	M22 x 1.5
15	.591	15	M22 x 1.5	—
16	.630	16	—	M24 x 1.5
18	.709	18	M26 x 1.5	—
20	.787	20	—	M30 x 2.0
22	.866	22	M30 x 2.0	—
25	.984	25	—	M36 x 2.0
28	1.102	28	M36 x 2.0	—
30	1.181	30	—	M42 x 2.0

Figure 6.

Source: **EATON Weatherhead** Hose Assembly Master Catalog W-HYOV-MC002-E November 2003

PHONE: 1-800-558-2808 FAX: 1-800-553-8769 WEB: www.imperialsupplies.com

Metric Fitting Identification

Metric Flareless Connections

Metric 60° Tube Seat DIN 7631

This series combines an internal 60° seat with parallel metric Light series threads. Mating with female metric swivel fittings with a globe seal made to DIN 3863L, this connection provides a metal to metal seal when tightened. This style can be identified by the internal 60° seat on the male metric threaded portion. Reference Figure 7 for thread information.

Japanese 30° Flare

The Japanese 30° flare style is similar to the 37° JIC flare connection except for two things. The seat angle is 30° and threads are metric straight threads. This fitting is often referred to as a 'Komatsu' style connection. To identify this style, first verify the seat angle is 30°. Next establish the metric thread size by measuring the thread outside diameter. Compare this dimension to those shown in Figure 9. The threads in this series will conform to Japanese Industrial Standard (JIS) B 0207.

Japanese 30° Flare (JIS)

Similar to BSPP and a 30° seat. The seal is made when contact is made between the male and female flares, with the threads retaining the connection. The JIS 30° flare is similar to the 37° flare connection. To determine the difference between the JIS 30° flare and the JIC 37° flare, carefully measure the seat angle. The threads in this series conform to Japanese Industrial Standard (JIS) B 0202.

Metric Split Flange Fittings

Metric split flanges are found in applications where high pressure and high vibration conditions exist. A flange clamp is used to secure the split flange head and o-ring against a machined port to provide an elastomeric and metal-to-metal seal. They are used in applications up to 3000 PSI. The physical dimensions are similar to the SAE Code 61 standard pressure series which makes the two styles fully interchangeable. To identify, referencing Figure 10, simply measure the flange head diameter to arrive at the nominal flange size.

Note: To prevent leakage when replacing this type of fitting with standard Code 61 hose end, make sure to use the existing flange halves and hardware with a new SAE-style o-ring. Also note that in this series there is a 5/8 nominal size which is a non-standard SAE size and require a special o-ring. Failure to reuse flange halves and hardware will result in an improper connection which could cause the hose assembly to fail.

⚠ Proper selection of hose and hose ends is critical for proper operation and safe use of the hose and hose ends. See page 3 of this catalog for important safety information.

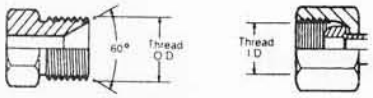

METRIC THREAD SIZE	MALE THREAD DIAMETER		FEMALE THREAD DIAMETER		PITCH	
	MM	IN	MM	IN	MM	IN
M12 x 1.5	12.0	.472	10.5	.413	1.5	.059
M14 x 1.5	14.0	.551	12.5	.492	1.5	.059
M16 x 1.5	16.0	.630	15.5	.610	1.5	.059
M18 x 1.5	18.0	.709	16.5	.650	1.5	.059
M22 x 1.5	22.0	.866	20.5	.807	1.5	.059
M26 x 1.5	26.0	1.024	24.5	.964	1.5	.059

Figure 7.

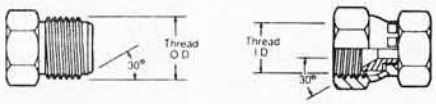

METRIC TUBE SIZE	THREAD SIZE	MALE THREAD DIAMETER		FEMALE THREAD DIAMETER		PITCH	
MM	MM	MM	IN	MM	IN	MM	IN
6	M14x1.5	14	.551	12.5	.492	1.5	.059
9	M18x1.5	18	.709	16.5	.650	1.5	.059
12	M22x1.5	22	.866	20.5	.807	1.5	.059
16	M24x1.5	24	.945	22.5	.886	1.5	.059
19	M30x2.0	30	1.181	28.5	1.122	1.5	.059
25	M33x2.0	33	1.299	31.5	1.240	1.5	.059
32	M42x2.0	42	1.653	40.5	1.594	1.5	.059

Figure 8.

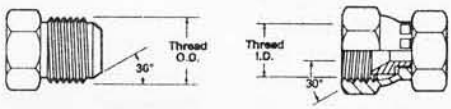

INCH SIZE	THREAD SIZE	MALE THREAD O.D.		FEMALE THREAD I.D.	
		IN	MM	IN	MM
1/4	1/4-19	17/32	13.7	1/2	12.4
3/8	3/8-19	11/16	17.2	5/8	16.0
1/2	1/2-14	27/32	21.5	25/32	19.8
3/4	3/4-14	1-1/16	26.9	1	25.4
1	1-11	1-11/32	34.0	1-1/4	31.8
1-1/4	1-1/2-11	1-29/32	48.5	1-27/32	46.2
2	2-11	2-3/8	60.4	2-5/16	58.2

Figure 9.

NOMINAL FLANGE SIZE		FLANGE HEAD O.D.		O-RING GROOVE DIA "A"		DIA. "B"	
MM	IN	MM	IN	MM	IN	MM	IN
12.7	1/2	30	1.19	18.5	.73	25.0	.98
15.9	5/8	34	1.34	20.1	.79	28.0	1.10
19.0	3/4	38	1.50	21.5	.85	31.0	1.22
25.4	1	44	1.75	28.5	1.12	38.0	1.50
31.8	1-1/4	51	2.00	34.5	1.36	44.0	1.73
38.1	1-1/2	60	2.38	44.4	1.75	54.0	2.12
50.8	2	71	2.81	56.5	2.22	65.0	2.56

Figure 10.

PHONE: 1-800-558-2808 FAX: 1-800-553-8769 WEB: www.imperialsupplies.com

c) BSPP & BSPT Fitting Identification

Identifying metric, or non-USA, threaded connections is similar to identifying the connections that have been commonly used in the United States. The following text covers how to identify the different styles of metric connections offered by Eaton.

BSPP & BSPT Thread Chart

BSP Thread Size	1/8-28	1/4-19	3/8-19	1/2-14	5/8-14	3/4-14	1-11	1-1/4–11	1-1/2–11	2-11
Male Thread Diameter	9.72 (.375)	13.16 (.518)	16.66 (.656)	20.96 (.825)	22.91 (.902)	26.44 (1.041)	33.25 (1.309)	41.91 (1.650)	47.80 (1.882)	59.51 (2.347)
Female Thread Diameter	8.73 (.343)	11.66 (.459)	15.37 (.605)	18.90 (.744)	20.85 (.821)	24.38 (.960)	30.61 (1.205)	39.24 (1.545)	45.24 (1.781)	55.94 (2.242)
Pitch	.91 (.036)	1.34 (.053)	1.34 (.053)	1.81 (.071)	1.81 (.071)	1.81 (.071)	2.31 (.091)	2.31 (.091)	2.31 (.091)	2.31 (.091)

Figure 4a. Dimension Note: MM(IN)

Threads

The thread forms and their corresponding specifications listed below are used on all of the metric styles of connections which will be discussed later. These cover the basic forms of the threads but not the style of connection.

THREAD TYPE	SPECIFICATIONS
British Parallel Pipe Threads	BS 2779, ISO/R 228
British Taper Pipe Threads	BS 21, ISO/R 7
Metric Parallel Threads	DIN 3852, ISO/R 6149
Metric Taper Threads	DIN 3852

Note: **BS** British Standards Institution

ISO International Standards Organization

DIN Deutsche Industrie Norme

To identify metric connections, you will need instruments that can accurately measure thread inside and outside diameters, thread pitch and fitting seat angles. The TA-1002 Thread Measuring Guide and Tool Kit is a basic kit that will help you in identifying most of the connections you will be encountering on imported equipment.

Parallel Threads ('G')

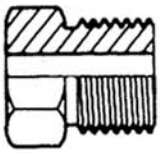

Figure 1.

apered Threads ('R')

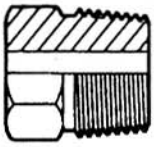

Figure 2.

Parallel and Tapered Threads

The first step in identifying thread forms is to determine if the thread is parallel or tapered. Parallel threads are not used for sealing fluids. Sealing is achieved by an elastomeric o-ring, metal seal, machined ring into the hex itself or a seat machined into the end of the fitting. This style is similar to straight thread o-ring port connections where the threads are used for retention of the sealing method against a machine port. Parallel threads can be determined by laying a straight edge along the threads. If the threads are parallel to the center line of the fitting, then the fitting has parallel threads. See Figure 1.

Tapered threads seat by the interference caused by the male and female threads. These threads create a pressure-tight joint by metal deformation when they are tightened. Sealants on the threads are commonly used in this style of connection. Laying a straight edge on the threads, compare this line with the center line of the fitting. If this line tapers slightly away from the center line, then the threads are tapered. See Figure 2.

British Pipe Threads

There are two forms of British Standard Pipe Threads that are used in the world today. They are BSPP (British Standard Pipe Parallel) and BSPT (British Standard Pipe Tapered). The BSPT male thread mates with the female BSPT thread similar to an NPTF connection. The 30° BSPP male adapters connect to a female BSPP thread with a 30° cone. This style is comparable to an NPSM swivel style. These threads are almost identical to the NPTF Pipe Thread except for the flank angle. This angle is 55° versus 60° on the NPTF. See Figure 3. Because of this difference, the two forms are NOT interchangeable.

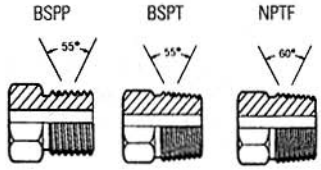

Figure 3.

Source: **EATON Weatherhead** Hose Assembly Master Catalog W-HYOV-MC002-E November 2003

PHONE: 1-800-558-2808 FAX: 1-800-553-8769 WEB: www.imperialsupplies.com

d) Non-DOT

Brass Fittings

Compression

⚠ Refer to safety information regarding proper selection of tubing and tube fittings on page 1.

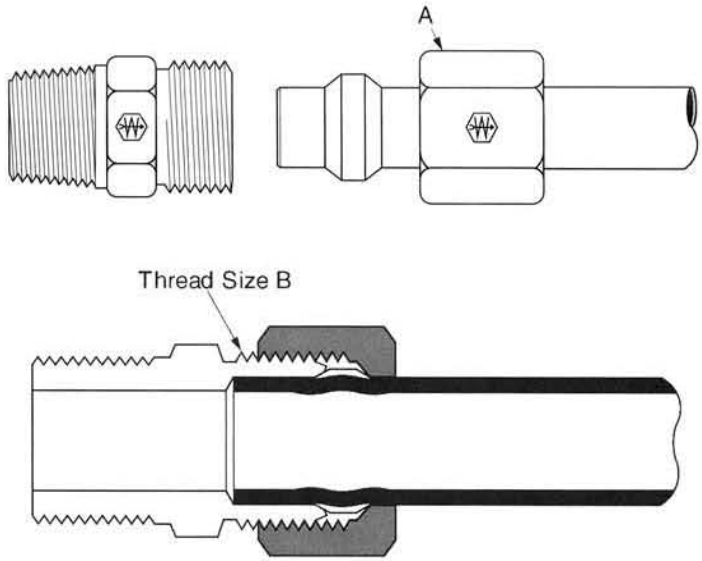

Tube O.D.	1/8	3/16	1/4	5/16	3/8	7/16	1/2	5/8	3/4	1
Thread Size-B	5/16-24	3/8-24	7/16-24	1/2-24	9/16-24	5/8-24	11/16-20	13/16-18	1-18	1-1/4–18

- **Typical Application**
  Instrumentation, hydraulic and pneumatic systems.

- **Pressure**
  Working pressure up to 2000 psi with a 4:1 safety factor depending on tube size. When using plastic tubing, use the working pressure for type used.

- **Vibration**
  Fair resistance - use long nut when greater vibration resistance is needed.

- **Temperature Range**
  -65°F to +250°F (-53°C to +121°C) with metal tubing. When using compatible plastic tubing do not exceed the tubing temperature range. (Refer to tubing temperature range.)

- **Material**
  CA360 Brass.

- **Used With**
  Aluminum, copper and Weatherhead plastic tubing.
  Plastic tubing, except for PT230, requires 2030x insert. Not recommended for steel tubing. See page 28-32 for material compatibility, and pages 33-35 for plastic tubing.

- **Advantages**
  Low cost. Easy to assemble, no flaring. Available with long or short nut. Broad selection of styles and sizes.

- **Conformance**
  Listed by Underwriter's Laboratories (available on special order) for flammable liquids. Meets specifications and standards of ASA, ASME and SAE.

- **How to Order**
  Compression fittings are ordered as complete assemblies (body, nut and sleeve). To order assembly supplied with long nuts, simply add the prefix "1" to the catalog number. Example: 68x4 with long nut becomes 168x4. Nuts and sleeves can be ordered separately by catalog number. To order bodies only (less nut and sleeve). prefix catalog number with letter "B". Example: B68x4.

- **NOTE**
  Refer to current price list for availability of cataloged items. Quotations and delivery of non-stock items supplied on request. Configurations and dimensions subject to change without notice. Additional information can be found in SAE J512.

- **Assembly Instructions**
  1. Cut tubing to desired length.
  2. Slide nut and then sleeve on tube. Threaded end "A" of nut must face toward fitting.
  3. Insert tubing into fitting body. Be sure tubing is bottomed on fitting shoulder.
  4. Lubricate threads and assemble nut to fitting body.
  5. Tighten nut hand tight. From that point, tighten with a wrench the number of turns indicated in the chart below.

Tube Size	Additional Turns From Hand Tight
1/8" thru 1/4"	1-1/4
5/16"	1-3/4
3/8" thru 1"	2-1/4

Label Set: W-8022 (adhesive)
CL-490 (non-adhesive)

Source: **EATON Weatherhead** Tube and Pipe Fitting Master Catalog W-HYOV-MC001-E March 2003

PHONE: 1-800-558-2808 FAX: 1-800-553-8769 WEB: www.imperialsupplies.com

e) Mini-Barb® Fittings

Mini-Barb®

Brass Fittings

⚠ Refer to safety information regarding proper selection of tubing and tube fittings on page 1.

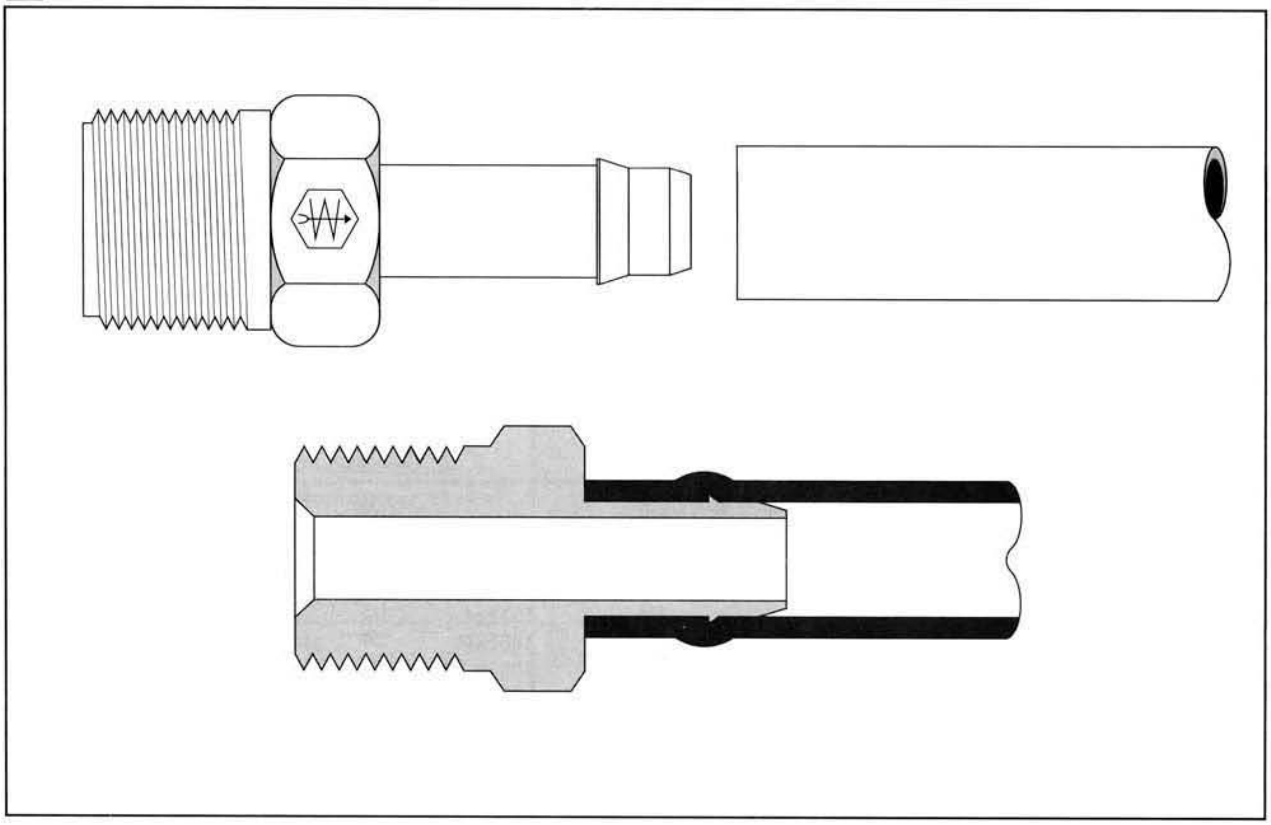

- **Typical Application**
  Temperature control circuits, test apparatus, lubricant, coolant lines, pneumatic circuits, vacuum and fluid systems.
- **Pressure**
  Will withsand burst pressures of plastic tubing.
- **Vibration**
  Excellent resistance.
- **Temperature Range**
  Depends on tubing used.
- **Material**
  CA360 Brass.
- **Used With**
  PT240 Polyethylene tubing. See page 28-32 for material compatibility and page 33-35 for plastic tubing.
- **Advantages**
  Quick connecting - no tube preparation. Hand assembly. Low cost one-piece push-on design. Barbed lip provides safe, positive connection. Compact size permits use in extremely tight areas.
- **Conformance**
  An exclusive item with Weatherhead. User approvals only.
- **How to Order**
  Individually by catalog number.
- **NOTE**
  Refer to current price list for availability of cataloged items. Quotations and delivery of non-stock items supplied on request. Configurations and dimensions subject to change without notice.
- **Assembly Instructions**
  1. Push the tubing over insert.
  2. Bottom the tubing against fitting body.

Label Set: FS-1000 (adhesive)
CL-496 (non-adhesive)

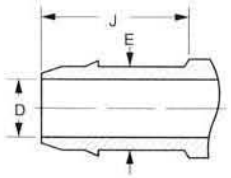

Common Dimensions of Barbed End

Tubing O.D.	D	E	J
5/32	.062	.113	.38
*3/16	.078	.125	.50
1/4	.127	.189	.50
3/8	.196	.270	.50
1/2	.312	.395	.63

*No barb on 3/16" size.

f) Polyline® Flareless

Brass Fittings

Polyline® Flareless

⚠ Refer to safety information regarding proper selection of tubing and tube fittings on page 1.

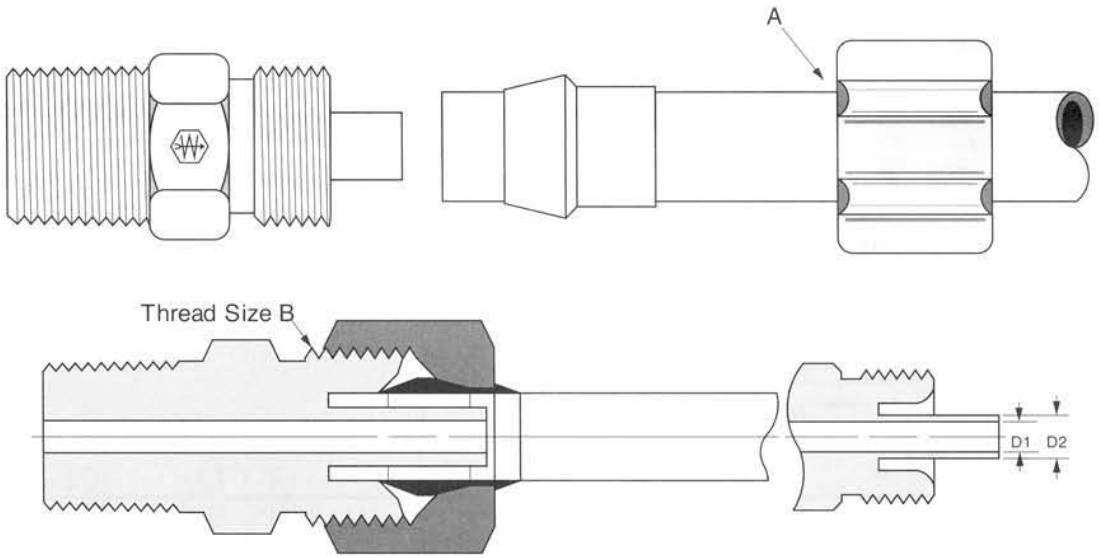

Size	x2	x3	x46	x4	x5	x6	x8
Tube O.D.	1/8	3/16	1/4	1/4	5/16	3/8	1/2
Thread Size-B	5/16–24	3/8–24	3/8–24	3/8–24	7/16–24	1/2–24	11/16–20
Flow Dia. (D1)	.094*	.125*	.078	.125	.141	.203	.312
Support Dia. (D2)	–	–	.120	.166	.180	.245	.370

*No tube support in assembly – Flow Diameter for body only.

- **Typical Application**
  Pneumatic instrumentation circuits, lubricant and cooling lines.

- **Pressure**
  Working pressure up to 500 psi with a 4:1 safety factor depending on tube size. When using plastic tubing, use the working pressure for type used.

- **Vibration**
  Excellent resistance.

- **Temperature Range**
  -65°F to +250°F (-53°C to +121°C) with brass sleeve and metal tubing. When using compatible plastic tubing do not exceed the tubing temperature range. (Refer to tubing temperature range.)

- **Material**
  CA360 Brass body, plastic sleeve.

- **Used With**
  Aluminum, copper and hard plastic tubing requires brass sleeve.

- **Used With (Continued)**
  Weatherhead PT200 and PT240 plastic tubing use plastic sleeve.
  Not recommended for steel tubing.
  See page 28-32 for material compatibility and pages 33-34 for plastic tubing.

- **Advantages**
  No flaring of tubing required. Easy installation, captive sleeve, pre-assembledforinstallationandcanbereassembled.

- **Conformance**
  An exclusive item with Weatherhead. User approvals only.

- **How to Order**
  Order 1/4" O.D. tubing with .040 wall, use suffix x4. Example: 1262x4. When .062 wall is desired, use suffix x46. Example: 1262x46.

  Ordered as complete assemblies (body, nuts and sleeves) by catalog number. Nuts, sleeves and nut/sleeve assemblies can be orderd separately by catalog number.

NOTE: 1/8" and 3/16" tube O.D. assemblies are supplied with brass sleeves and no inserts.

- **NOTE**
  Refer to current price list for availability of cataloged items. Quotations and delivery of non-stock items supplied on request. Configurations and dimensions subject to change without notice.

- **Assembly Instructions**
  1. Cut tubing to desired length.
  2. Slide nut/sleeve assembly on tube. Threaded end "A" of nut must face toward fitting.
  3. Bottom tubing into fitting.
  4. **Plastic sleeve -** tighten nut, hand tight.
     Brass sleeve - tighten nut, hand tight, then additional 3/4 turn.

Label Set: FS-2100 (adhesive)
CL-498 (non-adhesive)

Source: **EATON Weatherhead** Tube and Pipe Fitting Master Catalog W-HYOV-MC001-E March 2003

PHONE: 1-800-558-2808 FAX: 1-800-553-8769 WEB: www.imperialsupplies.com

g)

Inverted Flare

Brass Fittings

⚠ Refer to safety information regarding proper selection of tubing and tube fittings on page 1.

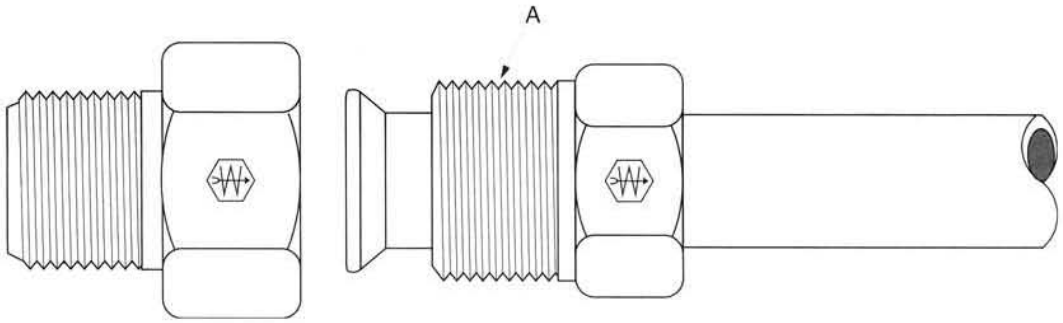

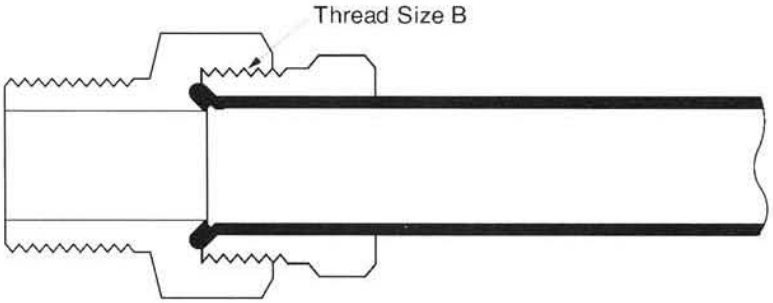

Tube O.D.	1/8	3/16	1/4	5/16	3/8	7/16	1/2	5/8	3/4	7/8	1
Thread Size-B	5/16-28	3/8-24	7/16-24	1/2-20	5/8-18	11/16-18	3/4-18	7/8-18	1-1/16-16	1-3/16-16	1-5/16-16

- **Typical Application**
  Hydraulic brake, power steering, fuel lines and transmission cooler lines, LP and natural gas (special order).

- **Pressure**
  Working pressure up to 2000 psi depending on tube size. Will withstand burst pressure of standard tubing - up to 5000 psi with bundy-weld (double flared) and 3500 psi with copper tubing, depending on size.

- **Vibration**
  Excellent resistance.

- **Temperature Range**
  -65°F to +250°F (-53°C to +121°C) range at maximum operating pressures.

- **Material**
  CA360 Brass.

- **Used With**
  Copper, brass, aluminum and steel hydraulic tubing that can be flared. See page 28-32 for material compatibility.

- **Advantages**
  Very low cost and reusable. Seats and threads are internal and protected. Compact, excellent vibration life. Short nut affords very close tube bends. Steel or brass tube nut.

- **Conformance**
  Listed by Underwriter's Laboratories (available on special order) for fuel equipment, refrigeration and gas. Meets specifications and standards of ASA, ASME, SAE and MS (Military Standards).

- **How to Order**
  Order individually by catalog number.

- **NOTE:**
  Refer to current price list for availability of cataloged items. Configurations and dimensions subject to change without notice. Additional information can be found in SAE J512.

- **Assembly Instructions**
  1. Cut tubing to desired length. Make sure all burrs are removed and the ends are cut square.
  2. Slide nut on tube. Threaded end "A" of nut must face out.
  3. Flare end of tube with a 45° flaring tool. See page 26 for flare data.
     a. Measure flare diameter.
     b. Examine flare for excessive thin out.
     c. On thin wall, welded or brazed tubing, use double flare to prevent pinch-off and cracked flares.
  4. Lubricate threads and assemble to fitting body. Nut should be turned hand tight.
  5. Tighten assembly with a wrench until a solid feeling is encountered. From that point, apply a one-sixth turn.

NOTE: Do not over-torque as it may damage the fittings or split the tubing at the flare.

Label Set: W-8022 (adhesive)
CL-490 (non-adhesive)

Source: **EATON Weatherhead** Tube and Pipe Fitting Master Catalog W-HYOV-MC001-E March 2003

PHONE: 1-800-558-2808 FAX: 1-800-553-8769 WEB: www.imperialsupplies.com

h)

Brass Fittings

SAE 45° Flare

⚠ Refer to safety information regarding proper selection of tubing and tube fittings on page 1.

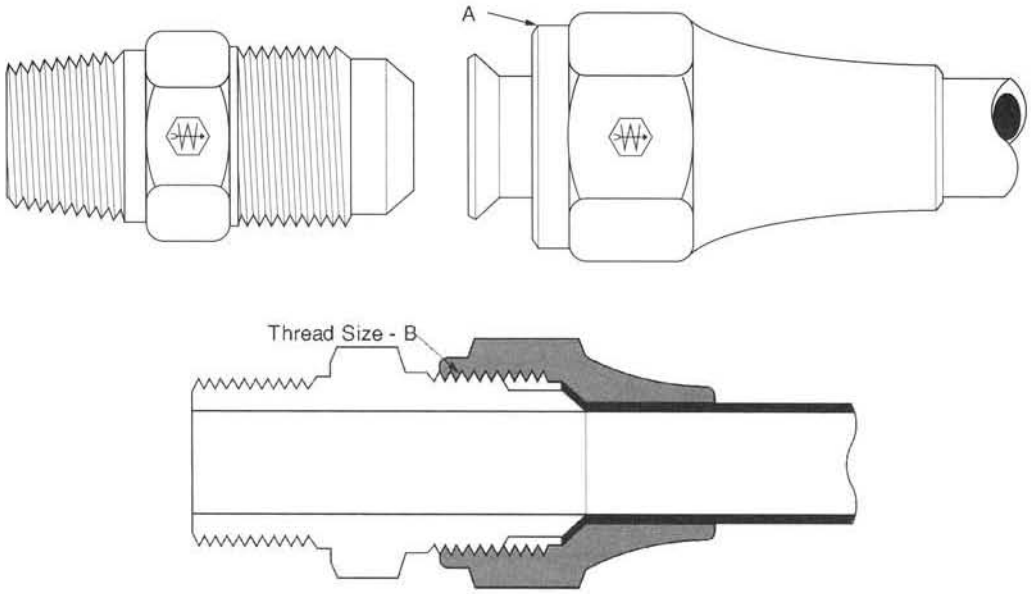

Tube O.D.	1/8	3/16	1/4	5/16	3/8	7/16	1/2	5/8	3/4
Thread Size-B	5/16-24	3/8-24	7/16-20	1/2-20	5/8-18	11/16-16	3/4-16	7/8-14	1-1/16-14

- **Typical Application**
  LP and natural gas, flammable liquids (special order), instrumentation, refrigeration, power steering, hydraulic and pneumatic systems.

- **Pressure**
  Working pressure up to 2000 psi depending on tube size. Will withstand burst pressure of standard tubing - up to 5000 psi with bundy-weld (double flared) and 3500 psi with copper tubing, depending on size.

- **Vibration**
  Good resistance - use long nut when greater vibration resistance is required.

- **Temperature Range**
  -65°F to +250°F (-53°C to +121°C) range at maximum operating pressures.

- **Material**
  CA360 Brass.

- **Used With**
  Copper, brass, aluminum and steel hydraulic tubing that can be flared. See page 28-32 for material compatibility.

- **Advantages**
  Low cost and reusability, long or short nut. Good resistance to vibration.

- **Conformance**
  Listed by Underwriter's Laboratories (available on special order) for flammable liquids, refrigeration and gas. Meets specifications and standards of ASA, ASME, SAE and MS (Military Standards).

- **How to Order**
  Order individually by catalog number.

- **NOTE**
  Refer to current price list for availability of cataloged items.
  Configurations and dimensions subject to change without notice.
  Quotations of non-stock items avaiable upon request. Additional information can be found in SAE J512.

- **Assembly Instructions**
  1. Cut tubing to desired length. Make sure all burrs are removed and the ends are cut square.
  2. Slide nut on tube. Threaded end "A" of nut must face out.
  3. Flare end of tube with a 45° flaring tool. See page 26 for flare data.
     a. Measure flare diameter.
     b. Examine flare for excessive thin out.
  4. Lubricate threads and assemble to fitting body. Nut should be turned hand tight.
  5. Tighten assembly with a wrench until a solid feeling is encountered. From that point, apply a one-sixth turn.

NOTE: Do not over-torque as it may damage the fitting or split the tubing at the flare.

Label Set: **W-8022** (adhesive)
CL-490 (non-adhesive)

Source: **EATON Weatherhead** Tube and Pipe Fitting Master Catalog W-HYOV-MC001-E March 2003

PHONE: 1-800-558-2808 FAX: 1-800-553-8769 WEB: www.imperialsupplies.com

i) D.O.T.

Air Brake - Nylon Tubing

Brass Fittings

⚠ Refer to safety information regarding tubing selection on page 1.

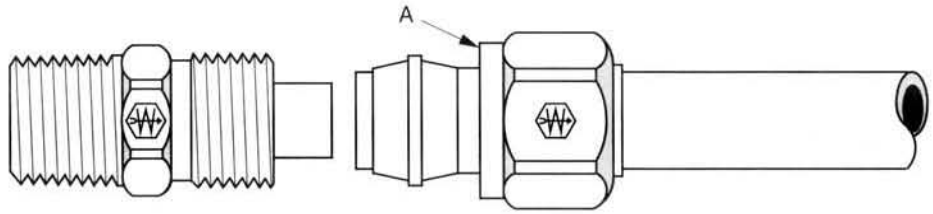

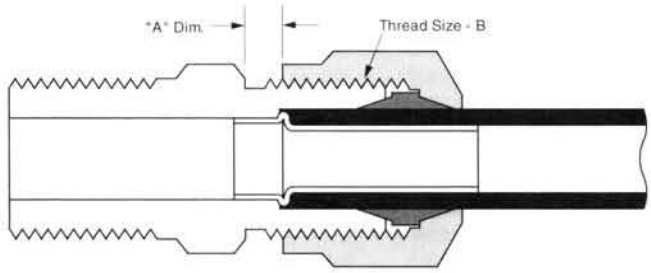

Tube O.D.	1/4	3/8	1/2	5/8	3/4
Thread Size-B	7/16–24	17/32–24	11/16–20	13/16–18	1–18

- **Typical Application**
  Air brake systems except where temperatures exceed +200°F or where battery acid can drip on tubing.

- **Pressure**
  Maximum operating pressure of 150 psi.

- **Vibration**
  Fair resistance.

- **Temperature Range**
  -40°F to +200°F (-40°C to +93°C)

- **Material**
  CA360 Brass.

- **Used With**
  NT100 Nylon Tubing - SAE J844 Type A and B. See page 33for NT100 Nylon Tubing data.

- **Advantages**
  Easy to assemble (no tube preparation or flaring required.) Built in tube support. May be used with copper tubing by replacing nut, sleeve and insert with long nut and spherical sleeve. Insert should be removed for copper tubing use. See page 97 for details.

- **Conformance**
  Meets specifications and standards of SAE and DOT FMVSS 571.106.

- **How to Order**
  For complete assemblies (body, nuts and sleeves), order by catalog number. Example: 1468x4x4. To order body only (less nut and sleeve), add prefix "B" to catalog number and change "14" to "13". Example: B1368x4x4. Nuts, sleeve and insert can be ordered separately by catalog number.

  To order complete assembly with pipe sealant (Seal-A-Thread), add suffix "Z" to catalog number. Example: 1468x4x4Z (special order only).

  To order complete assembly with gauge ring, add suffix "K" to catalog number. Example: 1468x4x4K (special order only).

- **NOTE**
  Refer to current price list for availability of cataloged items. Quotations and delivery of non-stock items supplied on request. Configurations and dimensions subject to change without notice. Additional information can be found in SAE J246.

- **Assembly Instructions**
  1. Cut tubing to desired length.
  2. Slide nut and then sleeve on tubing. Threaded end of nut "A" must face toward fitting body.
  3. Insert tubing into the preassembled fitting. Be sure tubing is bottomed in fitting.
  4. Tighten nut to required torque as indicated on chart. Another check on proper assembly is dimension A also noted on chart. A gauge ring also assures installation to specification. See page 96.

Tube Size	Torque	A Dimension
1/4	85 to 115 in. lbs.	.085/.105
3/8	12 to 17 ft. lbs.	.125/.145
1/2	25 to 33 ft. lbs.	.100/.120
5/8	26 to 35 ft. lbs.	.115/.135
3/4	38 to 50 ft. lbs.	.180/.200

Disassembly: Remove nut and pull tubing out of fitting body. Insert will remain in tubing.

Reassembly: Push tubing and insert into fitting body until it bottoms. Thread nut onto fitting body and torque as in Step 4.

Label Set: FS-900 (adhesive)
CL-16-3 (non-adhesive)

Source: **EATON Weatherhead** Tube and Pipe Fitting Master Catalog W-HYOV-MC001-E March 2003

PHONE: 1-800-558-2808 FAX: 1-800-553-8769 WEB: www.imperialsupplies.com

j) D.O.T.

Push > Connect®

Brass Fittings

⚠ Refer to safety information regarding proper selection of tubing and tube fittings on page 1.

Push > Connect®

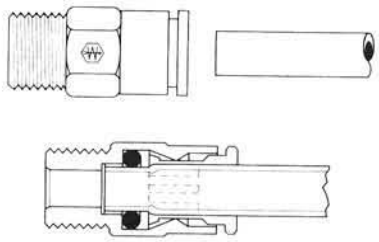

- **Typical Application:** Compressed air, pneumatic instrumentation, circuit, lubricant and cooling lines.
- **Pressure:** Up to 250 psi depending on tube size.
- **Sealing Method:** O-Ring of Buna-N Construction. (Viton available on request by special order.)
- **Temperature Range:** When using compatible plastic tubing do not exceed the tubing temperature range (Refer to tubing temperature range).
- **Material:** Brass, Nickel Plated.
- **Vacuum:** Fittings rated at 29.5 inches of mercury vacuum.
- **Used With:** PT230 and TP160 nylon, and PT240 Polyethylene tubing. See page 28-32 for material compatibility and pages 33-34 for plastic tubing.
- **Advantages:** Ease of assembly. No tools required, reusability of fittings and the time savings of assembly and disassembly.
- **Hex Dimensions:** All hexes are in inches.
- **How to Order:** Individually by catalog number.
- **NOTE:** Refer to current price list for availability of cataloged items. Quotations and delivery of non-stock items supplied on request. Configurations and dimensions subject to change without notice.
- **Assembly Instructions**
  1. To connect, simply push the tubing into the fitting.
  2. To disconnect, depress the collet ring with two fingers and withdraw.

Label Set: CL-499 (non-adhesive)

See Push > Connect® Fittings on pages 66-70.

Push > Connect® Metric

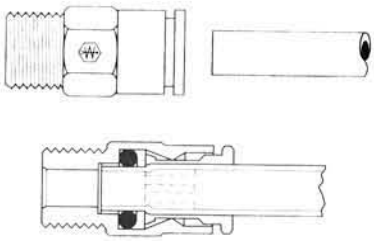

Nominal Size	2	4	5MM	6	8
Thread					
MM			M5 x .8		
BSPT	1/8 (2PT)	1/4 (4PT)		3/8 (6PT)	1/2 (8PT)
BSPP	1/8 (2PP)	1/4 (4PP)		3/8 (6PP)	1/2

- **Typical Application:** Compressed air, pneumatic instrumentation, circuit, lubricant and cooling lines.
- **Pressure:** Up to 250 psi depending on tube size.
- **Sealing Method:** O-Ring of Buna-N Construction. (Viton available on request by special order.)
- **Temperature Range:** -40°F to 200°F (-40°C to 93°C).
- **Material:** Brass, Nickel Plated.
- **Used With:** MTP160 nylon tubing. See page 28-32 for material compatibility and page 34 for plastic tubing.
- **Advantages:** Ease of assembly. No tools required, reusability of fittings and the time savings of assembly and disassembly.
- **Hex Dimensions:** All hexes are metric.
- **How to Order:** Individually by catalog number.
- **NOTE:** Refer to current price list for availability of cataloged items. Quotations and delivery of non-stock items supplied on request. Configurations and dimensions subject to change without notice.
- **Assembly Instructions**
  1. To connect, simply push the tubing into the fitting.
  2. To disconnect, depress the collet ring with two fingers and withdraw.

SUFFIX CHART

MM - Metric Screw Thread
MMS - Metric Screw Thread Swivel
MRP - Metric Red Plug
PP - British Parallel Plug
PPS - British Parallel Pipe Swivel
PT - British Tapered Pipe
PTS - British Tapered Pipe Swivel

See Push > Connect® Fittings on pages 71-74.

Push > Connect® Flow Controls

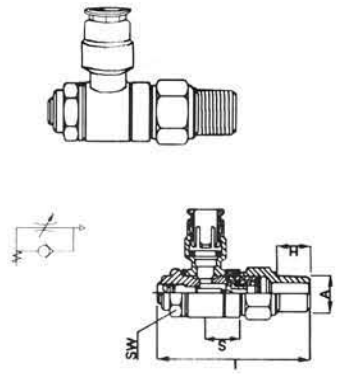

- **Typical Application:** Compressed air, pneumatic instrumentation, circuit, lubricant and cooling lines. Also excellent for assembly equipment and cylinder control.
- **Pressure:** Up to 250 psi depending on tube size.
- **Sealing Method:** O-Ring of Buna-N Construction. (Viton available on request by special order.)
- **Temperature Range:** 0°F to +160°F (-17.8°C to +71°C)
- **Material:** Brass, Nickel Plated.
- **Used With:** PT230 and TP160 nylon, and PT240 Polyethylene tubing. See page 28-32 for material compatibility and pages 33-35 for plastic tubing.
- **Advantages:** Ease of assembly. No tools required, reusability of fittings and the time savings of assembly and disassembly. These flow controls have a simple design, but offer excellent ability to control the speed of a cylinder or motor.
- **Hex Dimensions:** All hexes are in inches.
- **How to Order:** Individually by catalog number.
- **NOTE:** Refer to current price list for availability of cataloged items. Quotations and delivery of non-stock items supplied on request. Configurations and dimensions subject to change without notice.
- **Assembly Instructions**
  1. To connect, simply push the tubing into the fitting.
  2. To disconnect, depress the collet ring with two fingers and withdraw.

See Push > Connect® Fittings on pages 75 & 76.

Source: **EATON Weatherhead** Tube and Pipe Fitting Master Catalog W-HYOV-MC001-E March 2003

PHONE: 1-800-558-2808 FAX: 1-800-553-8769 WEB: www.imperialsupplies.com

k) D.O.T.

Air Brake - Copper Tubing

Brass Fittings

⚠ Refer to safety information regarding tubing selection on page 1.

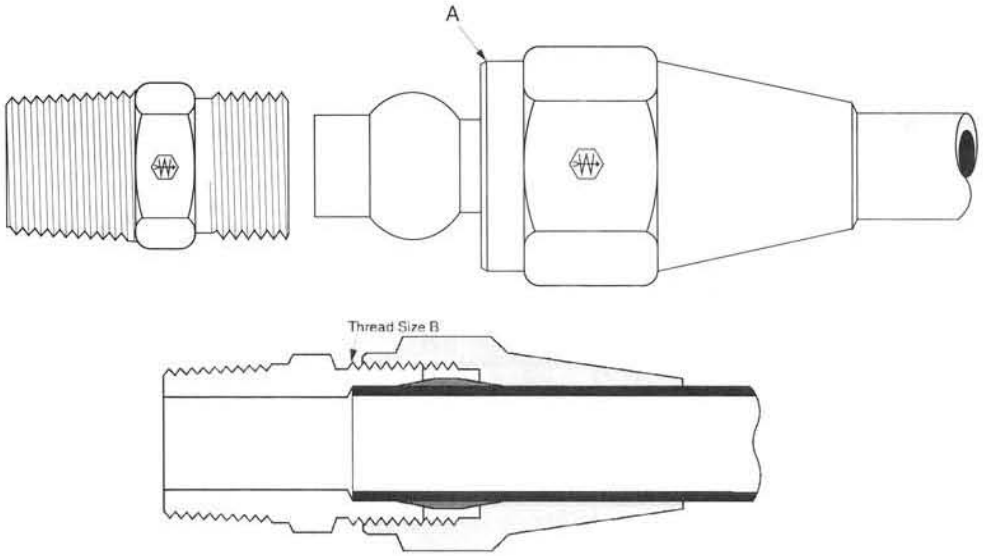

Tube O.D.	1/4	3/8	1/2	5/8	3/4	1
Thread Size-B	7/16–24	17/32–24	11/16–20	13/16–18	1–18	1-1/4–16

- **Typical Application**
  Air brake systems.
- **Pressure**
  Maximum operating pressure of 150 psi.
- **Vibration**
  Fair resistance.
- **Temperature Range**
  -65°F to +250°F (-53°C to +121°C) with copper tubing.
- **Material**
  CA360 Brass.
- **Used With**
  Copper tubing in air brake systems.
- **Advantages**
  Easy to assemble (no flaring). May be used with nylon tubing by replacing long nut and spherical sleeve with insert, rigid sleeve and nut. See page 91 for details.
- **Conformance**
  Meets specifications and standards of SAE and DOT.
- **How to Order**
  For complete assemblies (body, nuts and sleeves), order by catalog number. Example: 1368x4. To order body only (less nut and sleeve), add prefix "B" to catalog number. Example: B1368x4. Nuts and sleeve can be ordered separately by catalog number.

  To order complete assembly with pipe sealant (Seal-A-Thread), add suffix "Z" to catalog number. Example: 1368x4Z (special order only).
- **NOTE**
  Refer to current price list for availability of cataloged items. Quotations and delivery of non-stock items supplied on request. Configurations and dimensions subject to change without notice. Additional information can be found in SAE J246.
- **Assembly Instructions**
  1. Cut tubing to desired length. Make sure all burrs are removed and the ends are cut square.
  2. Slide nut and then sleeve on tubing. Threaded end of nut "A" must face toward fitting body.
  3. Insert tubing into fitting. Be sure tubing is bottomed on fitting shoulder.
  4. Thread nut onto fitting body until it is hand tight.
  5. From that point, tighten with a wrench the number of turns indicated in the chart below.

Tube Size	Additional Number of Turns from Hand Tight
1/4, 3/8	1-3/4
1/2, 5/8, 3/4	3-1/4

Label Set: FS-800 (adhesive)
CL-491 (non-adhesive)

l)

Steel Fittings

JIC 37° Flare-Twin®

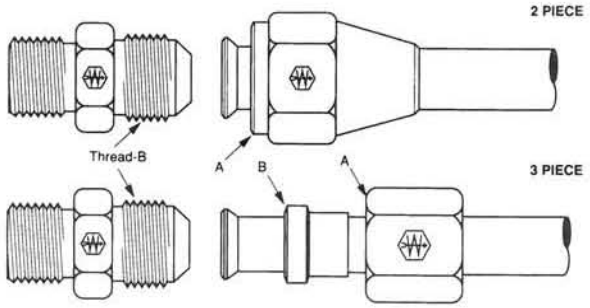

Tube O.D.	1/8	3/16	1/4	5/16	3/8	1/2	5/8	3/4	7/8	1	1-1/4	1-1/2	2
Thread Size-B	5/16–24	3/8–24	7/16–20	1/2–20	9/16–18	3/4–16	7/8–14	1-1/16–12	1-3/16–12	1-5/16–12	1-5/8–12	1-7/8–12	2-1/2–12

Forged Fittings and Adapters
5000 Series Pressure Rating Chart

Connection Type	End Size												
	1/8"	3/16"	1/4"	5/16"	3/8"	1/2"	5/8"	3/4"	7/8"	1"	1-1/4"	1-1/2"	2"
SAE Fittings	6000	5000	5000	5000	5000	4000	4000	4000	4000	4000	3000	3000	3000
W/Adjustable Straight Thread O-Ring	5000	5000	4500	4000	4000	4000	3000	3000	2500	2500	2000	1500	1125
With Male Pipe	6000		5000		5000	4000		4000		4000	3000	2500	2500
With Female Pipe	5000		5000		4000	3000		2500		2000	1500	1500	1000

Brazed Fittings (TF)/SAE
5000 Series Pressure Rating Chart

Connection Type	End Size												
	1/8"	3/16"	1/4"	5/16"	3/8"	1/2"	5/8"	3/4"	7/8"	1"	1-1/4"	1-1/2"	2"
SAE Fittings	5000	5000	5000	5000	5000	4500	3500	3500	3000	3000	2500	2000	1500
W/Adjustable Straight Thread O-Ring	5000	5000	4500	4000	4000	4000	3000	3000	2500	2500	2000	1500	1125
With Male or Female Pipe	5000	5000	5000	5000	4000	3000	3000	2500	2500	2000	1150	1000	1000

- **Typical Application**
  Hydraulic, instrumentation and chemical processing systems.

- **Pressure**
  Refer to the pressure charts above. The maximum working pressure of an adapter is the lower working pressure of the end size. Ex: C3069x8x6, 8 = 4000 psi and 6 = 5000 psi. Maximum working pressure is 4000 psi.

- **Vibration**
  Good resistance. Vibration resistance decreases with increase in tube size. Use two piece design when greater vibration resistance is required.

- **Temperature Range**
  -65°F to +400°F (-53°C to +204°C) at maximum operating pressures.

- **Material**
  Carbon Steel - AISI/SAE 12L14
  Stainless Steel - Type 316
  Plating - Zinc, yellow dichromate.

- **Used With**
  Copper, brass, steel, aluminum and other tubing that can be flared. See page 28-32 for material compatibility.

- **Advantages**
  Zinc Plate. Choice of two or three-piece design. Broad selection of styles and sizes. Interchangeable with all sources.

- **Conformance**
  Meets specifications and standards of ASA, ASME and SAE.

- **How to Order**
  To order a three-piece assembly, prefix the catalog number with a "3". Example: To order a male connector C5205x4 with nut and sleeve assembled, order C35205x4. To order a two-piece assembly, order nut and body separately. Example: Order male connector C5205x4 and two-piece style nut C5115x4. Bodies, nuts and sleeves can be ordered separately by catalog number. Stainless steel bodies, nuts and sleeves are ordered separately by catalog number.

  To order Weathercote finish (black phosphate coating) use "W" prefix in place of "C". Example: W5205x4 (special order only).

  To order with pipe sealants (Seal-A-Thread), add a "Z" suffix to the catalog number. Example: C5205x4Z (special order only).

- **NOTE**
  Refer to current price list for availability of cataloged items. Quotations and delivery of non-stock items supplied on request. Configurations and dimensions subject to change without notice. Additional information can be found in SAE J514.

- **NOTE** (Continued)
  Weatherhead fittings with a "C" prefix are made from a forged construction. **Example:** C5405x4. Weatherhead fittings with a "TF" prefix are made from a brazed construction. Example: TF5405x4.

- **Assembly Instructions**

1. Cut tubing to desired length. Make sure all burrs are removed and ends are cut square.
2. Slide nut on tube. Threaded end of nut "A" must face toward fitting body. (See above.)
3. Slide sleeve on tube (3-piece assembly only). Collar end "B" of sleeve must face toward fitting body. (See above.)
4. Flare end of tubing with 37° flaring tool.
   a. Check flare diameter. For dimensional data on 37° flares, see page 26.
   b. Examine flare for excessive thin-out.
   c. On thin wall, welded or brazed tubing, use double flare to prevent pinch-off and cracked flares.
5. Lubricate threads and assemble to fitting body. Nut should be turned hand tight.
6. Tighten assembly until finger tight, then until a sharp torque rise is encountered. From that point, apply one-sixth turn with a wrench.

Label Set: FS-200 (adhesive)

Source: **EATON Weatherhead** Tube and Pipe Fitting Master Catalog W-HYOV-MC001-E March 2003

PHONE: 1-800-558-2808 FAX: 1-800-553-8769 WEB: www.imperialsupplies.com

m)

Steel Fittings

For-Seal®

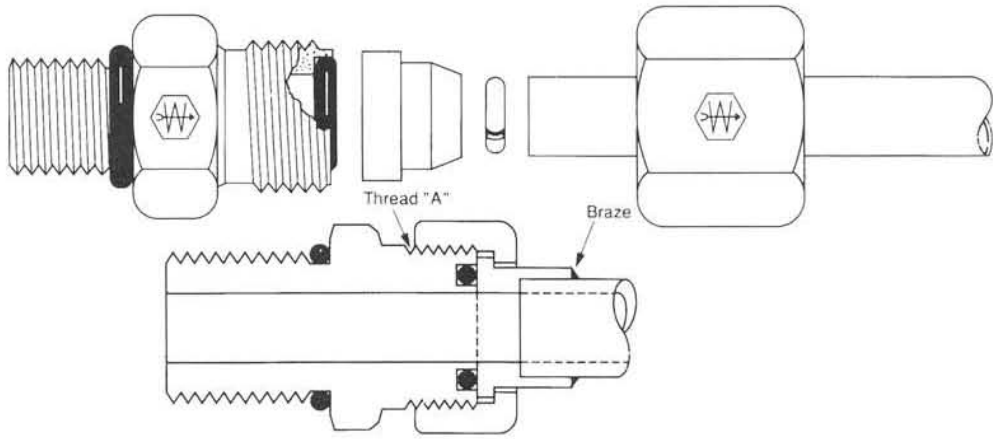

Tube O.D.	1/4	3/8	1/2	5/8	3/4	1	1-1/4	1-1/2
For-Seal Thread	9/16–18	11/16–16	13/16–16	1–14	1-3/16–12	1-7/16–12	1-11/16–12	2–12
Maximum PSI	6000	6000	6000	6000	6000	6000	4000	4000
Adjustable Fittings PSI	6000	6000	6000	6000	6000	5000	4000	3000

Rated pressures are for low surge, static type applications.

- **Typical Application**
  High pressure hydraulic, pneumatic and chemical processing.
- **Pressure***
  Operating pressure to 6000 psi (1-1/4" and 1-1/2" maximum 4,000 psi). See thread chart.
- **Sealing Method**
  Face O-Ring.
- **Vibration**
  Excellent resistance.
- **Material**
  12L14 Steel.
- **Plating**
  All fittings are zinc plated, except braze parts which are oil dipped.
- **Used With**
  Steel and stainless steel tubing (tubing for brazing must be non-coated).
- **Advantages**
  Tubing is brazed for permanent leakproof connection.
- **Conformance**
  Meets SAE J1453.
- **How to Order**
  Individually by catalog number. O-Ring supplied with fittings.
- **NOTE**
  Refer to current price list for availability of cataloged items. Quotations and delivery of non-stock items supplied on request. Configuration and dimensions subject to change without notice. Additional information can be found in SAE J1453.
- **Assembly Instruction**
  See pages 150 & 151. See page 230 & 231 for assembly equipment.
- **Label Set:** FS-2400 (adhesive)

* Pressure ratings shown are the pressure ratings for the fitting and are not necessarily the pressure rating applicable in an assembly with hydraulic hose. The applicable pressure rating for an assembly with hydraulic hose is the lower value specified for the hose and the fitting.

Source: **EATON Weatherhead** Tube and Pipe Fitting Master Catalog W-HYOV-MC001-E March 2003

PHONE: 1-800-558-2808 FAX: 1-800-553-8769 WEB: www.imperialsupplies.com

IV. BRASS GAUGE INSTRUCTIONS

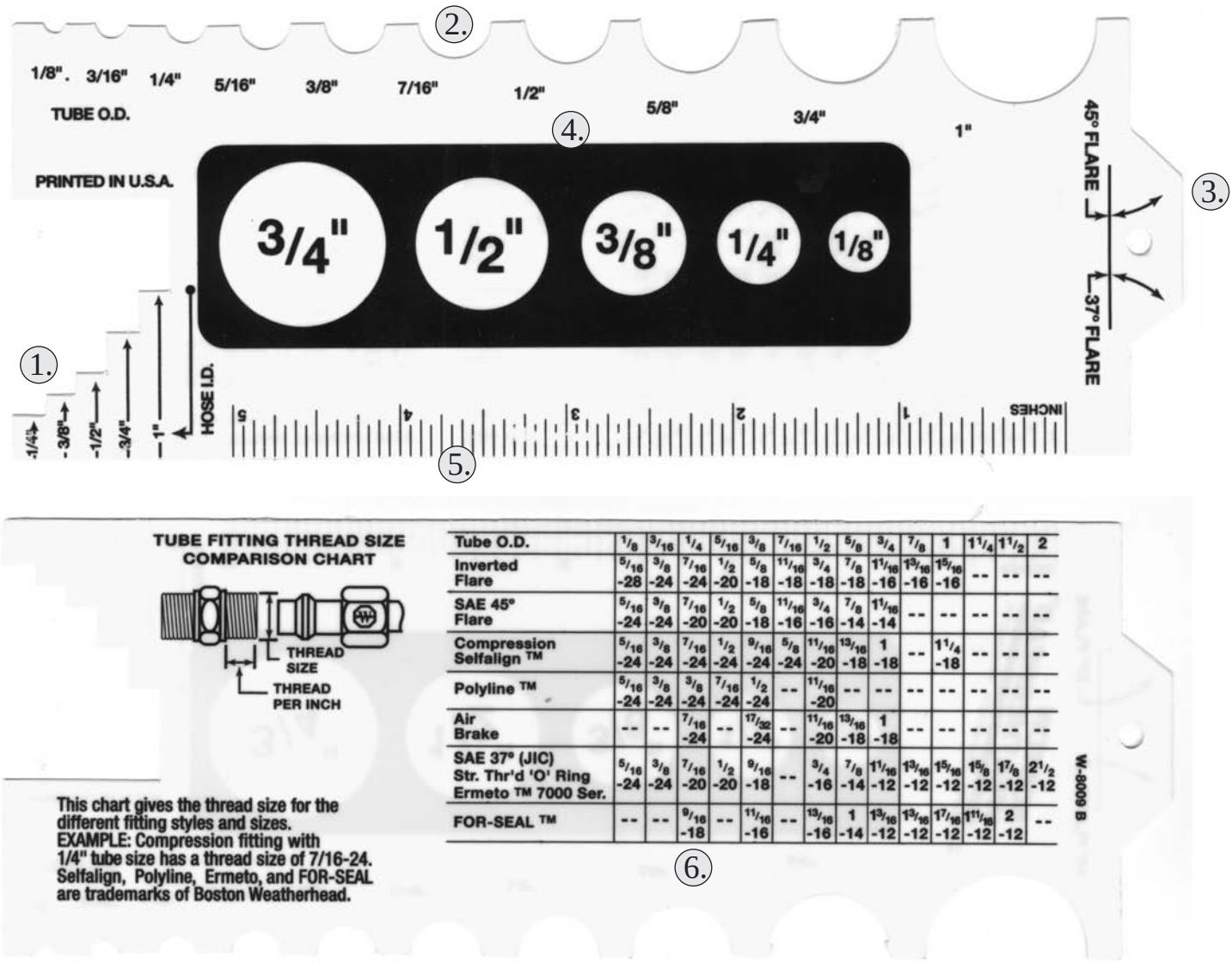

Tube O.D.	1/8	3/16	1/4	5/16	3/8	7/16	1/2	5/8	3/4	7/8	1	1 1/4	1 1/2	2
Inverted Flare	5/16 -28	3/8 -24	7/16 -24	1/2 -20	5/8 -18	11/16 -18	3/4 -18	7/8 -18	1 1/16 -16	1 3/16 -16	1 5/16 -16	--	--	--
SAE 45° Flare	5/16 -24	3/8 -24	7/16 -20	1/2 -20	5/8 -18	11/16 -16	3/4 -16	7/8 -14	1 1/16 -14	--	--	--	--	--
Compression Selfalign ™	5/16 -24	3/8 -24	7/16 -24	1/2 -24	9/16 -24	5/8 -24	11/16 -20	13/16 -18	1 -18	--	1 1/4 -18	--	--	--
Polyline ™	5/16 -24	3/8 -24	3/8 -24	7/16 -24	1/2 -24	--	11/16 -20	--	--	--	--	--	--	--
Air Brake	--	--	7/16 -24	--	17/32 -24	--	11/16 -20	13/16 -18	1 -18	--	--	--	--	--
SAE 37° (JIC) Str. Thr'd 'O' Ring Ermeto ™ 7000 Ser.	5/16 -24	3/8 -24	7/16 -20	1/2 -20	9/16 -18	--	3/4 -16	7/8 -14	1 1/16 -12	1 3/16 -12	1 5/16 -12	1 5/8 -12	1 7/8 -12	2 1/2 -12
FOR-SEAL ™	--	--	9/16 -18	--	11/16 -16	--	13/16 -16	1 -14	1 3/16 -12	1 3/16 -12	1 7/16 -12	1 11/16 -12	2 -12	--

1. "Steps" allow for measuring inside diameter of hose.

2. "Half-moons" used for measuring outside diameter of tube.

3. Angles on tab are used for finding the degree of flare - 37˚ or 45˚.

4. "Black Box" is for measuring pipe thread size.

5. Pipe thread can also be measured, outside thread to outside thread, minus 1/4 inch.

6. Used to find tube fitting thread per inch.

PHONE: 1-800-558-2808 FAX: 1-800-553-8769 WEB: www.imperialsupplies.com

Brass Fittings

Pipe

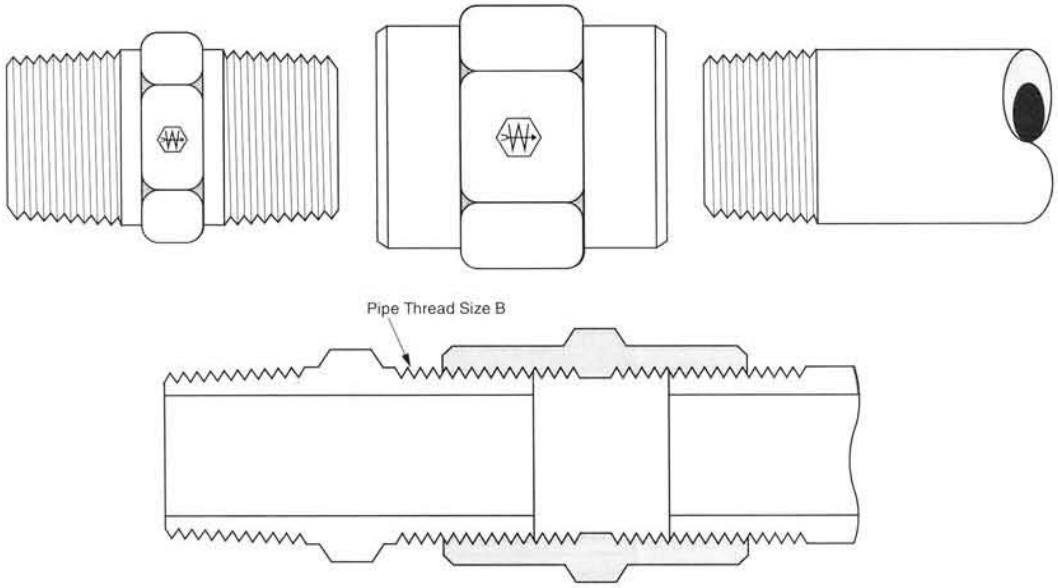

Pipe Size	1/16	1/8	1/4	3/8	1/2	3/4
Thread Size-B	1/16–27	1/8–27	1/4–18	3/8–18	1/2–14	3/4–14

- **Typical Application**
  Grease, refrigeration, instrumentation and hydraulic systems. Fuel, LP and natural gas available on special order.
- **Pressure**
  Operating pressure up to 1200 psi.
- **Vibration**
  Fair resistance.
- **Temperature Range**
  -65°F to +250°F (-53°C to +121°C).
- **Material**
  CA360 Brass.
- **Used With**
  Brass, bronze and iron pipe.
- **Advantages**
  Dryseal pipe threads (NPTF). Large range of sizes and configurations
- **Conformance**
  Listed by Underwriters Laboratories (available on special order) for fuel equipment, refrigeration and gas. Meets specifications and standards of ASA, ASME and SAE.
- **How to Order**
  Order individually by catalog number. Example: 3325x4. To order with pipe sealant (Seal-A-Thread), add a "Z" suffix to the catalog number. (Special order only). Example: 3325x4Z.
- **NOTE**
  Refer to current price list for availability of cataloged items. Quotations and delivery of non-stock items supplied on request. Configurations and dimensions subject to change without notice. Additional information can be found in SAE J530 Automotive Pipe Fittings and SAE J531 Drain Plugs.
- **Assembly Instructions**
  1. Tighten approximately 2-1/2 turns past hand tight.
  2. Fittings with Seal-A-Thread tighten two turns past hand tight. Brittle materials require special cautions.
- **Label Set:** W-8022 (adhesive)
  CL-490 (non-adhesive)

Source: **EATON Weatherhead** Tube and Pipe Fitting Master Catalog W-HYOV-MC001-E March 2003

PHONE: 1-800-558-2808 FAX: 1-800-553-8769 WEB: www.imperialsupplies.com

Application — Numbering Systems

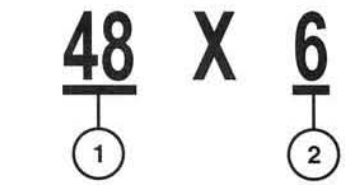

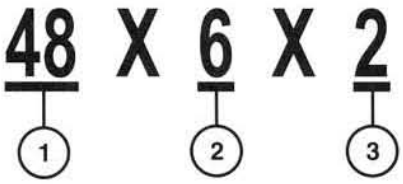

Numbering Systems

Fittings are identified by a series of numbers separated by the letter "X."

1. The number preceding the "X" is the Catalog "Base Number" and indicates the type of fitting. See Table 1 below for additional base number data (sometimes refered to as dash size).
2. The second number is the tube and/or pipe size in sixteenths of an inch. When a pipe thread for a given tube size follows the SAE standard as shown in Table 2, no other number is required. Example: 48X6 = SAE 45° Flare Male Connector–3/8" tube, 1/4" Male Pipe.
3. If the pipe size is not to the SAE standard, another "X" is added followed by the pipe size indicated in sixteenths of an inch. Example: 1/8" is equal to 2/16" or X2 suffix.

TABLE 1

Type	Example Male Connector	Example Female Connector
45° Flare	48	46
Compression	68	66
Polyline®	1268	1266
Selfalign®	681	661
Air Brake (Nylon)	1468	1466
Air Brake (Copper)	1368	1366
(JIC) Flare-Twin®	C5205	C5255
7000 Series Ermeto®	7205	7255

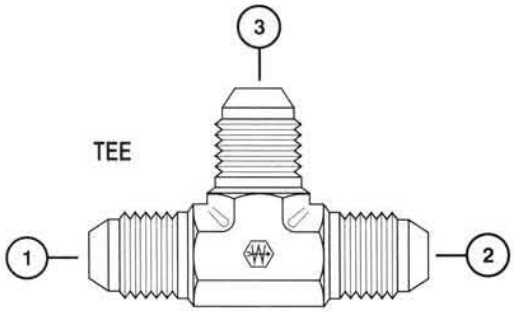

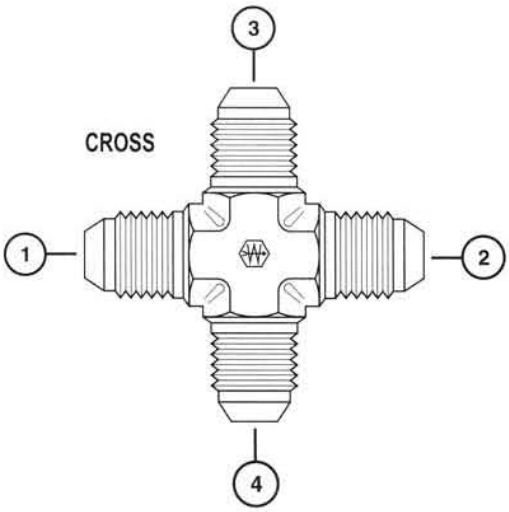

In designating tube and pipe sizes for tees and crosses that are not SAE standard, indicate the sizes in the sequence shown.

TABLE 2

	Tube Size	Pipe Threads	
		Brass Fitting	Steel Fitting
X2	1/8"	1/8"	1/8"
X3	3/16"	1/8"	1/8"
X4	1/4"	1/8"	1/8"
X5	5/16"	1/8"	1/8"
X6	3/8"	1/4"	1/4"
X7	7/16"	1/4"	1/4"
X8	1/2"	3/8"	3/8"
X10	5/8"	1/2"	1/2"
X12	3/4"	1/2"	3/4"
X14	7/8"	3/4"	3/4"
X16	1"	1"	1"
X20	1-1/4"	No Standard	1-1/4"
X24	1-1/2"	No Standard	1-1/2"
X32	2"	No Standard	2"

Plating

Standard Boston Weatherhead Steel Pipe and Flare fittings are supplied with Zinc plate and a yellow Dichromate finish.

Steel Flareless fittings are supplied standard with the exclusive Weathercote® finish. Forged (JIC 37°) Flare-Twin fittings are designated by a prefix "C". To special order alternative plating, add prefix letter to the catalog base number. For example, a "C" prefix indicates Zinc plate (C7205X4), and a "W" prefix indicates Weathercote® (W5205X4).

Source: **EATON Weatherhead** Tube and Pipe Fitting Master Catalog W-HYOV-MC001-E March 2003

PHONE: 1-800-558-2808 FAX: 1-800-553-8769 WEB: www.imperialsupplies.com