Recommended Practice

RP 606A **VMRS 013-001-013, 013-002-012**

BRAKE LINING PROCEDURES

PREFACE

The following Recommended Practice is subject to the Disclaimer at the front of TMC's *Recommended Maintenance Practices Manual.* Users are urged to read the Disclaimer before considering adoption of any portion of this Recommended Practice.

PURPOSE AND SCOPE

This Recommended Practice covers legal marking requirements for brake linings and explains these markings. It also discusses shoe and lining assembly and related procedures as they apply to heavy-duty vehicles.

It should be emphasized that this Recommended Practice does not establish friction requirements for brake linings or blocks, nor does it designate other significant characteristics which must be considered in overall brake performance.

LEGISLATION MARKING REQUIREMENTS

In 1966 several states enacted legislation requiring motor vehicle brake linings to be identified with markings on the edge of the material. These markings carry the manufacturer's identification, specific material designation, and alpha characters indicating the initial friction coefficient of the material. See **Table 1**. These markings are commonly referred to as "edge codes." See **Fig. 1** for an example of an edge code. The alpha character (friction class) code is determined in accordance with a SAE standard Recommended Practice. The SAE standard is the basis for friction coding of all brake linings and brake blocks.

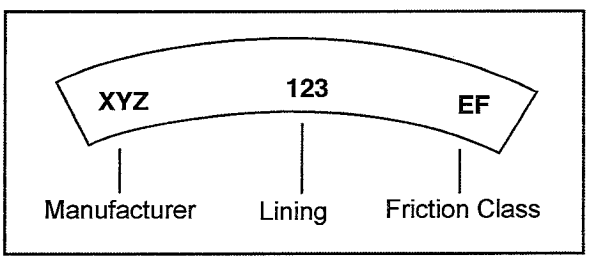

Fig. 1: Edge Code

Tests are conducted in accordance with SAE J661 , *Brake Lining Quality Control Test Procedure,* to determine friction coefficients. The friction coefficient code will consist of two letters. The first letter will represent the "Normal Friction Coefficient" and the second letter will represent the "Hot Friction Coefficient."

All new brake lining used in a motor vehicle shall be indelibly marked with good contrast on an external noncontacting surface in letters not less than 1/8 inch in height, with numbers and code letters giving the name under which approved, the catalog or formulation number, and code letters indicating the coefficient of friction classification of the lining, in that order. The name shall be abbreviated by not less than two letters. The required identification shall be placed on every brake lining.

TABLE 1

FRICTION COEFFICIENTS

Code Letter	Friction Coefficient
C	Not over 0.15
D	Over 0.15 but not over 0.25
E	Over 0.25 but not over 0.35
F	Over 0.35 but not over 0.45
G	Over 0.45 but not over 0.55
H	Over 0.55
Z	Unclassified

For the specific details of this practice, refer to SAE J866a, *Friction Coefficient Identification System for Brake Linings*, and SAE J661 procedures.

NOTE: Edge codes do not determine brake block performance. In essence, this standard simply determines initial normal and hot friction values of the material and does not indicate true quality, performance, wear, fade, or other important characteristics.

©2003—TMC/ATA

Issued 3/80
Revised 1/92

The true performance of brake lining cannot be determined by a simple friction machine test. The best way to accurately evaluate brake lining performance is on an inertia dynamometer, which simulates actual in-service brake conditions. Dynamometer and/or vehicle testing is a much more exact approach in determining true performance and wear properties of brake lining or brake blocks. The inertia dynamometer is the preferred method, since better control of the test variables can be maintained. In fact, the National Highway Traffic Safety Administration (NHTSA) specifies inertia dynamometer testing in Federal Motor Vehicle Safety Standard 121 (FMVSS 121) as part of the requirements to qualify an original equipment brake.

To assure that quality brake materials are used in your fleet, a partnership with a high quality supplier is recommended. The combination of their engineering and manufacturing expertise coupled with your operational records is the only way to achieve proper performance and reduced cost of operation. It takes far more than an edge code to assure quality in a brake lining.

SPECIALLY ENGINEERED LINING FORMULATION

The wedge brake requires a higher friction level than equivalent cam brakes. The extensive research that has been devoted to the wedge brake has proven the requirement for linings that have been specifically designed for this type brake. Only this specially engineered lining is recommended by the manufacturers of the wedge brake.

VEHICLE AXLE SPECIFICATIONS

It is recommended that tractors and trailers always be spec'd with gross axle weight ratings (GAWRs) for the maximum actual load to be carried for optimum brake performance. The operator who spec's out a GAWR which exceeds operational requirements will find that his or her vehicles' brakes are overworked, thus creating unbalanced brake systems. The larger GAWR will provide the extra durability in beams, gearing, bearings, hubs, wheels, and rims, but it will also require higher friction linings. Lining and drum wear will be accelerated. Both goals may be accomplished by using a dual weight rating, i.e., a 20,000 lb. load rating and a 23,000 lb. axle rating to provide the heavy-duty components required.

For 16.5-inch S-cam brakes used on axles loaded 17,000 to 20,000 pounds and actuated by Type 30 air chambers, EE, EF, and FF original equipment approved linings generally supply the best performance. The same brakes equipped with Type 24 chambers should use a higher friction linings. Generally, a minimum of high FF, but preferably GG rated linings should be used.

LINING WEAR PATTERN

In all rigid shoe cam-operated brakes, single or double anchor, it is normal for lining to wear more at the center of the shoe than at the ends. Some brakes use uniform thickness blocks while others use tapered blocks.

When brake linings are worn out and ready for replacement, the blocks that were originally uniform thickness throughout will be thicker at the ends than at the center. On the other hand, when worn out, tapered blocks that were thicker at the center of the shoe when new, will be approximately uniform in thickness throughout. See **Fig. 2**.

USE OF OVERSIZE BRAKE BLOCKS AND OVERSIZE ROLLER CAM FOLLOWERS FOR TRUCKS, BUSES, AND TRAILERS

All drums are marked (either by stamped or cast numbers) with the maximum inside diameter for which the drum can be safely operated (not the diameter to which a drum can be machined and then used). **This diameter must never be exceeded during the drum's use on the vehicle.** Although a typical maximum diameter is 16.620 inches for 16.5 inch nominal brakes, heavier drums may have greater allowable maximum diameters. See TMC RP 608A, *Brake Drums and Rotors*, for more details.

Although not commonly used on trucks, tractors, and trailers, oversized brake blocks are occasionally used in some applications (mostly on buses). The use of these are not generally recommended. Oversize linings usually require heavier drums with larger permissible inside diameters and do not guarantee additional margin for "cam over" because these linings can still be worn to the same thickness as standard linings.

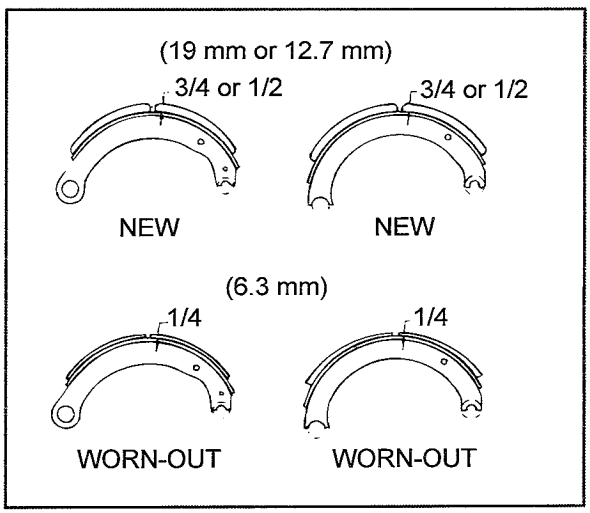

Fig. 2: Lining Wear Pattern

©2003—TMC/ATA

When the concern exists that any brake component (drum, brake shoes, cam bushings, etc.) may be worn beyond recommended limits prior to the next servicing, an oversize roller should be used to prevent sticking cams or cam "roll over."

LINING BLOCK INSTALLATION/FASTENING PROCEDURE

1. Clamp the lining to the shoe with "C" clamps so that rivet holes in the lining and shoe are in alignment.

2. Drive rivets into rivet holes using a drift.

3. Form rivet heads with the correct tubular rivet set following the sequence shown in **Fig. 4** for each block.

If the above rivet pattern can not be duplicated due to equipment (automatic riveters) or other hole patterns, riveting should be initiated at the block center and work outward to the corners.

The correct rivet must be selected for each application. A variation in shoe table thickness or countersink hole depth may require a different length rivet.

SAE J663, *Rivets for Brake Linings and Bolts for Brake Blocks*, and J492, *Rivets and Riveting*, describe the recommended rivet dimensions and clinch allowances. Typical sizes used for brake rivets (tubular type) are shown in **Fig. 5**.

The riveting machine must be adjusted so that the roll of the rivet is complete, but the rivet should not split. Always use a roll set, not a star set, when riveting brake linings. A star set does not compress the rivet and expand it to fill the hole. Consequently, the lining may work loose in service. See **Fig. 6**.

The solid portion of the rivet should end just at the inner surface of the shoe. The hollow portion of the rivet should protrude past the inner surface of the shoe. The proper size rivet must be used to completely fill the rivet hole. See **Fig. 6**.

Never shim the brake lining as this will result in a structurally inadequate assembly and possible noise problems.

Another method of attaching friction material is by "factory bonding." Bonded shoes have no rivets or bolts and do not require holes. Properly bonded shoes are structurally strong and offer certain benefits such as elimination of rust from the shoe tables and avoidance of grit and dirt in rivet or bolt holes.

NOTE: Bonding should not be attempted in-house as it is essential to utilize the expertise of a reputable heavy-duty lining bonder.

When reconditioning brake shoes, refer to RP 605A, *Reconditioning Brake Shoes*.

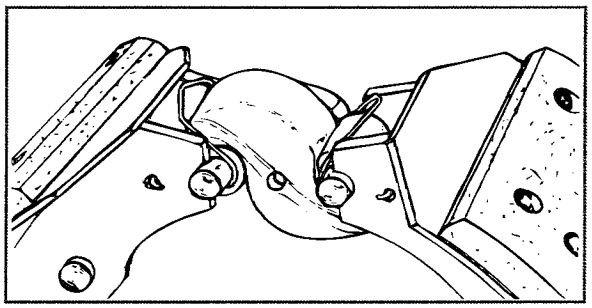

Fig. 3: Typical Fabricated Shoe Roller Cam Follower

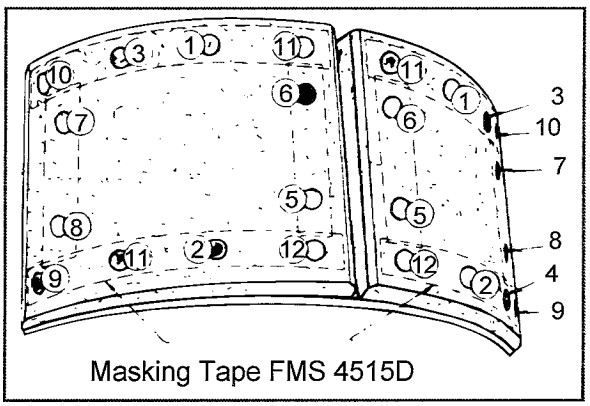

Fig. 4: Brake Block Riveting Sequence

Rivet #	Nominal Size	Clinch Allowance
8	3/16 (0.188)	0.122
10	1/4 (0.250)	0.162

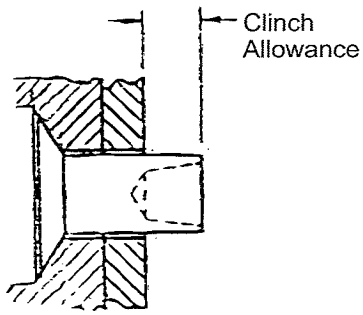

Fig. 5: Typical Tubular Rivet Sizes

STRIP LINING INSTALLATION FASTENING PROCEDURE

When lining shoes with strip linings, start riveting in the middle of the strip and continue towards the ends. Any use of oversized linings should follow the above precautions.

©2003—TMC/ATA

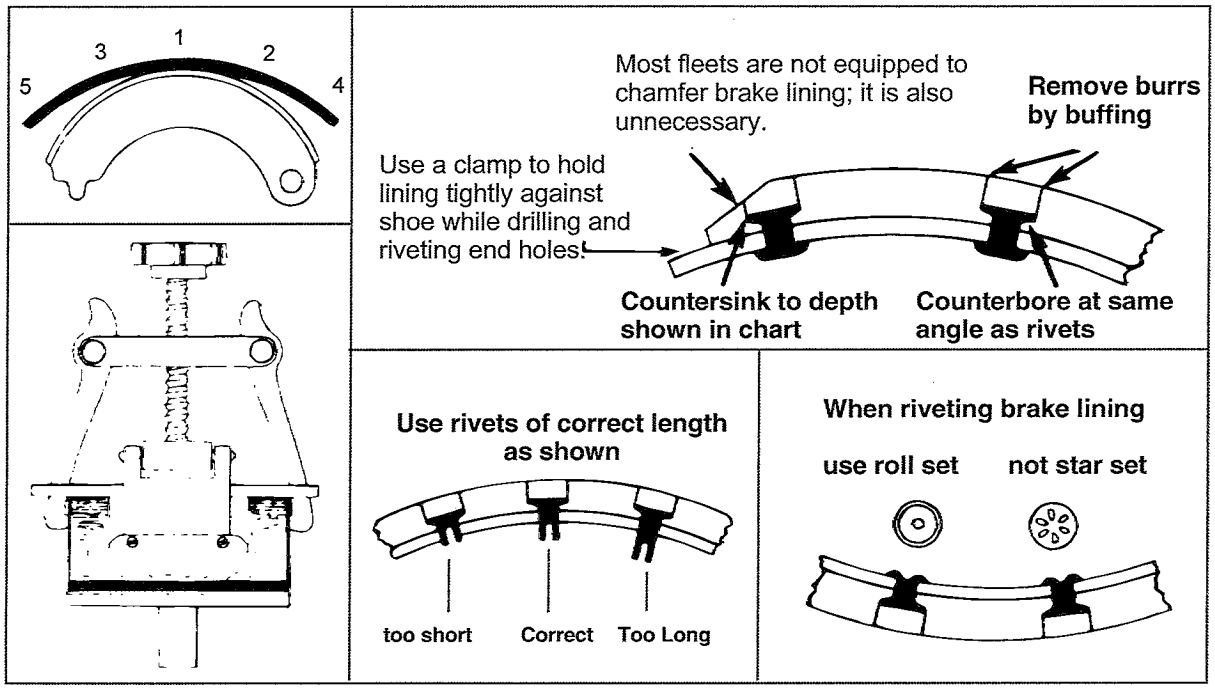

Fig. 6: Brake Block Riveting Procedure

©2003—TMC/ATA