Recommended Practice

RP 418 **VMRS 001, 001-001**

HEAVY-DUTY IN-CAB R-134a AIR CONDITIONING SYSTEMS

1. PREFACE

The following Recommended Practice is subject to the Disclaimer at the front of TMC's *Recommended Maintenance Practices Manual.* Users are urged to read the Disclaimer before considering adoption of any portion of this Recommended Practice.

2. PURPOSE

The purpose of this Recommended Practice is to establish recommendations for R-134a air conditioning systems. These recommendations are intended to describe equipment capable of meeting the requirements of over-the-highway vehicles and to minimize maintenance costs.

3. SCOPE

This Recommended Practice provides system component descriptions, installation recommendations, and maintenance procedures for heavy-duty in-cab air conditioning systems equipped with R-134a refrigerant. (This Recommended Practice is not to be used for trailer refrigeration.)

4. GENERAL INFORMATION

The vehicle air conditioning system shall be designed by the manufacturer for use with R-134a refrigerant. The system shall be designed to allow for reasonable access to service components, and maintain system integrity for a minimum of 24 months.

CAUTION: Technicians should always follow safety instructions when servicing vehicle air conditioning systems. For a comprehensive review of A/C safety procedures, refer to Chapter 2 of the *Automotive Air-Conditioning Refrigerant Service Guide*, is written by Philip G. Gott, and jointly published by the Society of Automotive Engineers and the Mobile Air Conditioning Society.

5. SYSTEM COMPONENT DESCRIPTIONS

5.1 Compressor

5.1.1 Identification. The compressor shall have visible identification indicating compatibility with R-134a and identifying the type and amount of lubricant contained in the compressor. Please refer to Section 7.5 for system charge requirements.

5.1.2 Clutches. Clutches shall employ double row or equivalent heavy-duty bearings and internal dust covers when applicable. External dust covers are advisable for use in excessively high dirt/dust environments.

5.1.3 Service Ports. Service ports shall be located in the system at points other than on the compressor. Refer to Section 5.14.

5.1.4 Safety Protection Devices. Safety protection devices shall be included for the compressor. Refer to Section 5.9 through 5.12 for details.

5.2 Condensers

5.2.1 Identification. The condenser shall have visible identification indicating compatibility with R-134a.

5.2.2 Type. Construction type, such as tube and fin, serpentine, etc., shall be at the discretion of the system/vehicle manufacturer.

5.2.3 Connections. The condenser refrigerant fittings should be **consistent** with the type specified for the system as a whole, i.e., tube-O fittings or block O-ring fittings. Fitting material shall not corrode with condenser tube material or mating fittings. The condenser shall be designed to allow the use of a backup wrench to tighten and loosen fittings, or a bracket shall be provided which will support the mating fittings and tubes when fittings are installed and removed. Refer to Section 5.13.

5.2.4 Auxiliary Fan Mounting. Most air condi-

©2003—TMC/ATA

Issued 3/95
Reissued 3/2001

tioning systems utilize the engine fan to draw air through a radiator-mounted condenser. For systems using auxiliary fans, one or more auxiliary fans may be mounted to the condenser to increase air flow. Such fans should be mounted to the condenser framework to provide structural support and should have a minimum of three (3) mounting points. Fans should be equipped with shrouds and shall have guards that comply with SAE J1308, *Fan Guard for Off-Road Machines.* [1]*

5.3 Receiver Driers

5.3.1 Identification. The receiver drier shall have visible identification indicating compatibility with R-134a. Indication of the quantity of desiccant and the direction of flow of the refrigerant through the receiver should be clearly visible and permanently attached to the drier.

5.3.2 Desiccant. The receiver drier shall contain R-134a compatible desiccant of adequate and proper drying media to maintain a dry system. The desiccant volume shall be specified by the system/vehicle manufacturer. The desiccant shall be contained in a manner that minimizes plugging of incorporated filter pads intended for removal of foreign particles.

5.3.3 Connections. The receiver drier refrigerant fittings shall be consistent with the type specified for the system as a whole. Refer to Section 5.13. Optional quick disconnect fittings are available.

5.4 Accumulators/In-Line Filters

5.4.1 Identification. The accumulator/in-line filter shall have visible identification indicating compatibility with R-134a. Indication of the quantity of desiccant should be clearly visible and permanently attached to the accumulator/in-line filter. The same applies to the direction of flow if the fittings are designed such that the accumulator/in-line filter can be mounted in reverse.

5.4.2 Design. The design of the accumulator should allow for a sufficient amount of oil being returned to the compressor. A fine mesh screen should be placed around the oil pick-up hole to ensure a proper filtering of the oil being returned to the compressor.

5.4.3 Desiccant. The accumulator shall contain R-134a compatible desiccant of adequate and proper drying media. The desiccant volume shall be specified by the system/vehicle manufacturer. The desiccant shall be contained in a manner that minimizes plugging of incorporated filter pads intended for removal of foreign particles. As an alternative, the desiccant may be placed in an in-line filter located in the liquid line. In this case, the accumulator need not contain desiccant.

5.4.4 Connections. The accumulator/in-line filter refrigerant fittings shall be consistent with the type specified for the system as a whole. Optional quick disconnect fittings are available for accumulators containing desiccant or in-line filters. Refer to Section 5.13.

5.5 Sight Glasses and Moisture Indicators

5.5.1 General. Sight glasses allow the system to be visually inspected for contamination. Moisture indicators provide a visual indication of moisture contamination. Either or both may be integrated into the receiver drier assembly.

5.5.2 Connections. When the sight glass and/or moisture indicator is not integral to the receiver drier, the fittings shall be consistent with the type specified for the system as a whole. Refer to Section 5.13.

5.5.3 Viewing Area. Sight glasses shall have a 3/8" minimum diameter of unobstructed glass area for viewing refrigerant flow. Moisture indicators shall have a viewing window. The viewing window shall be labeled and color coded to indicate "wet" and "dry" moisture conditions. Combination sight glass/moisture indicators shall incorporate both of the above parameters.

5.6 Expansion Valves and Orifice Tubes

5.6.1 Expansion Valves. The expansion valves shall be designed for, and have visible identification indicating compatibility with, R-134a.

5.6.2 Orifice Tubes. The orifice tubes shall be designed for and have visible identification indicating compatibility with R-134a.

*References in this document are indicated by bracketed numbers and are listed in order of appearance in the References section.

©2003—TMC/ATA

5.6.3 Connections. The expansion valve fittings should be consistent with the type specified for the system as a whole. Refer to Section 5.13.

5.7 Evaporators

5.7.1 Identification. The evaporator (or cab unit) shall have visible identification indicating compatibility with R-134a.

5.7.2 Type. Construction type, such as tube and fin, serpentine, etc., shall be at the discretion of the system/vehicle manufacturer.

5.7.3 Connections. The evaporator refrigerant fittings shall be consistent with the type specified for the system as a whole. Refer to Section 5.13.

5.8 Hoses and Tubing

5.8.1 Identification. Hoses shall have visible identification indicating compatibility with R-134a (per SAE J2064, *R134a Refrigerant Automotive Air Conditioning Hose*). [2]

5.8.2 Hose Material. Hose material shall be developed, tested and approved for use with R-134a (per SAE J2064). [2]

5.8.3 Tubing Material. Tubing shall be anti-corrosive and of sufficient diameter to not restrict the refrigerant flow to associated components.

5.9 Safety Devices

5.9.1 Pressure Relief Valves. The pressure relief valve shall be designed for use with R-134a systems as per SAE J639, *Safety and Containment of Refrigerant for Mechanical Vapor Compression Systems Used for Mobile Air Conditioning Systems.* [3] The function of the pressure relief valve is to safely relieve any excessive refrigerant pressure caused by a major malfunction. It is to be installed on or near the discharge side of the compressor. The pressure settings shall comply with the recommendations of the compressor manufacturer.

5.10 Control Devices

5.10.1 Thermostat

5.10.1.1 Identification. Thermostatic control switches shall be compatible with R-134a and clearly identified as such.

5.10.1.2 Function. The function of a thermostat is to prevent the evaporator from freezing by controlling the electrical circuit to the compressor clutch. This circuit is activated or deactivated based on the temperature of the coil. This temperature can be measured either in the evaporator coil or at the evaporator outlet.

Thermostats are temperature adjustable or non-adjustable. Non-adjustable or "fixed set" thermostats typically disengage the compressor clutch in the 32°F to 38°F range. Adjustable thermostats typically disengage the compressor clutch between 32°F and 50°F and may be controlled by a knob or cable.

5.10.2 Auxiliary Thermostats. Thermostatic control devices used in sleeper compartment systems should be electronic or electro-mechanical and control refrigerant flow in the sleeper. It should not control the compressor clutch.

5.11 Protection Devices. Protection devices designed to be installed on switch ports shall have threads that are compatible with switch port design. Refer to Section 5.14.2.1.

5.11.1 Identification. The protection devices shall be designed for, and have visible identification indicating compatibility with R-134a. The switch shall be indelibly labeled with the generic function, pressure setting, and installation cautions as required.

5.11.2 Connections. The electrical terminals should be protected by a weatherproof connector or sealant material to prevent corrosion and shall be positive locking type.

5.11.3 High Side High Pressure Switch. The high pressure switch shall be installed to properly control the compressor in the event of excessive refrigerant pressure and should be located near the receiver drier or expansion valve.

5.12 Other/Optional Devices and Switches. Optional devices and switches designed to be installed on switch ports shall have threads that are compatible with switch port design. Refer to Section 5.14.2.1. These devices and switches shall be designed for,

©2003—TMC/ATA

and have visible identification indicating compatibility with R-134a, where applicable.

5.12.1 Thermal Protection Switch. The function of the thermal protection switch is to sense component temperature(s) and control the system as required.

5.12.2 Clutch Cycling Protection Switch. The function of the switch is to monitor and control compressor clutch cycling.

5.12.3 Condenser Fan Control Switch

5.12.3.1 Identification. The condenser fan control switch shall be indelibly labeled with the generic function, pressure setting and installation cautions as required.

5.12.3.2 Connections. The electrical terminals should be protected by a weatherproof connector, or sealant material to prevent corrosion and shall be positive locking type.

5.12.3.3 Function and Location. The function of the condenser fan control switch is to control the fan clutch ensuring proper air flow across the condenser above a predetermined pressure. The switch shall be installed in the high side of the system.

5.12.4 Refrigerant Solenoid Valve. Solenoid valves are used to prevent the flow of refrigerant through the evaporator coils in auxiliary systems installed in sleeper compartments. They are not to be used in series-plumbed refrigerant systems.

Solenoid valves shall have visible identification indicating compatibility with R-134a. The direction of flow of the refrigerant through the valve should be clearly visible and permanently attached to the valve.

5.12.5 High Side Low Pressure Switch. The function of the high side low pressure switch is to disengage the compressor in the event of refrigerant loss and/or prevent low ambient operation. The switch should be located near the receiver drier or the expansion valve.

5.12.6 Fuse Plugs. Fuse plugs are single event devices that unnecessarily result in a complete loss of the refrigerant charge. The function of this device has been replaced by the pressure relief valve and is not recommended for use with R-134a systems. Refer to Section 5.9.1.

5.13 Fittings

5.13.1 General. Flare and push on fittings are not acceptable for R-134a systems. The styles of fitting employed by the system/vehicle manufacturer, shall be discretionary, but will be consistent within a given system, and shall be compatible with R-134a.

Acceptable styles of fittings are threaded O-ring fittings, flange O-ring fittings, plate fittings, and plate O-ring fittings.

5.13.2 O-Ring Fittings. O-ring construction shall be per SAE J1662, *Compatibility of Retrofit Refrigerant with Air Conditioning System Materials.* [4] Material shall be R-134a compatible.

5.14 Service and Switch Ports

5.14.1 Service Ports. Service ports shall be quick disconnect style as per SAE J639. [3]

5.14.2 Switch Ports

5.14.2.1 Recommended Design. Switch ports shall be self-sealing valve style with external M10 minimum metric threads on the discharge side and M12 maximum metric threads on the suction side.

5.14.2.2 Location. The location of the switch port is totally dependent on the function of the switch. Refer to Sections 5.11 and 5.12 for recommended locations.

5.15 Electrical Protection. A fuse or circuit breaker shall be placed between the clutch and the vehicle to isolate this circuit. A minimum 14-gauge wire should be used for the power source to the clutch to minimize voltage drop. The value of the fuse or circuit breaker will be determined by the system/vehicle manufacturer based on the total circuit load.

A clutch control diode should be used to protect the circuit from damage due to inductive surge.

Electrical components for refrigerant system control and protection shall be isolated from the main clutch circuit through the use of relays with the exception of the clutch control diode.

©2003—TMC/ATA

6. SYSTEM DESIGN AND INITIAL INSTALLATION

6.1 Compressor

6.1.1 Compressor Mounting Brackets. The compressor mounting bracket(s) shall be engine mounted and provide for proper belt alignment and adequate belt adjustment. Fasteners with locking features should be used for mounting the brackets and compressor. See Section 6.1.4 for drive belt alignment.

6.1.2 Compressor Mounting. The compressor shall be mounted per the compressor manufacturer's recommendations. See **Fig. 1.** The compressor shall be sized to ensure adequate system performance.

6.1.3 Compressor Clutch. The clutch shall be assembled to the compressor to allow for the proper air gap as recommended by the component manufacturer(s).

6.1.4 Drive Belt(s) Alignment. Specified alignment is as follows:

V-Belt	*Serpentine Belt*
1/2° = 1/10" per ft. per span length	1/3° = 1/16" per ft. per span length

Recommendation for Measurement: Use a straightedge from pulley to pulley. For measuring exact degrees, utilize an additional straightedge and measure the distance between the first and second edges.

Excessively long belts with an unsupported length of 18 inches or greater should have idler pulley(s) installed to prevent belt whip.

6.1.5 Clutch Electrical Requirements. The minimum voltage at the clutch coil shall be 11.5 volts with secure ground for a 12-volt system to ensure proper clutch engagement. The measurement should be taken while the clutch is engaged and

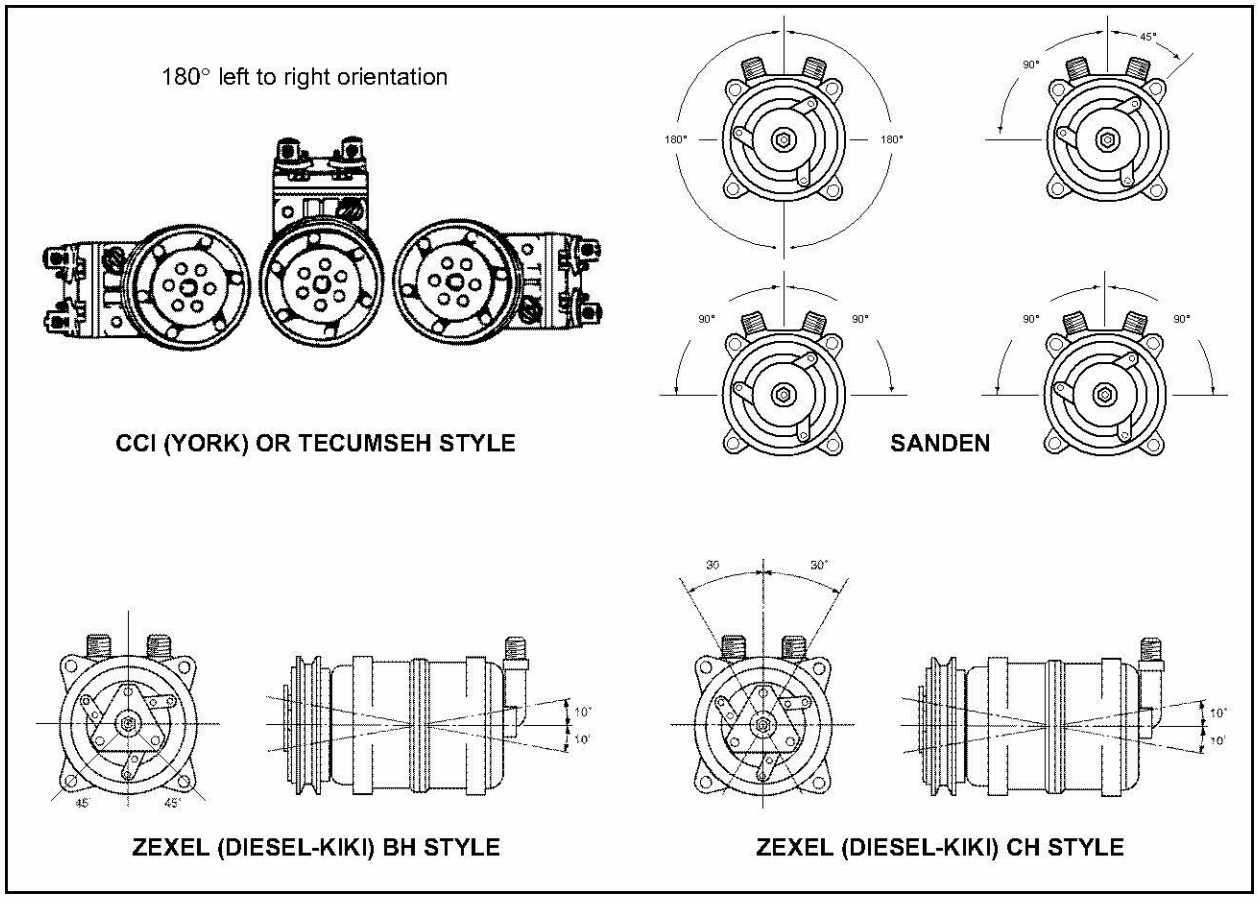

Fig. 1: Compressor Mounting

©2003—TMC/ATA

blower fan on high speed. The voltage should be maintained for a minimum of five (5) minutes.

6.2 Condenser. A means shall be provided to pass air through the condenser, either by the engine fan with the condenser radiator mounted, or by one or more independently operated fans. On systems where the condenser is mounted in front of the vehicle radiator or charge air cooler, it should be mounted in an unobstructed air stream and not touching the adjoining heat exchange surface. The condenser shall be mounted and sized so as to maintain operating system pressures per the vehicle manufacturer's recommendations. System pressures should not exceed 350 psi maximum normal operating pressure for the high side (discharge side) of the system.

6.3 Receiver-Drier and Accumulator. The receiver-drier and/or accumulator shall be mounted to an isolated component such as the cab or radiator (or isolation mounted) to minimize vibration. Do not direct mount to the engine or frame, nor shall it be mounted near a source of high ambient heat. If exposure to high ambient heat cannot be eliminated, the receiver-drier and/or accumulator shall be insulated with an appropriate material.

6.3.1 The receiver-drier inlet and outlet fittings should be horizontal as mounted.

6.3.2 The fittings of in-line driers should be horizontal as mounted.

6.3.3 The canister of an accumulator should be mounted vertically.

6.4 Moisture Indicator and Sight Glass. If used, the moisture indicator and/or sight glass shall be located near the receiver-drier outlet.

6.5 Thermostatic Expansion Valve (TXV) And Orifice Tube. The TXV should be attached to the evaporator inlet. If remote-mounted, insulate the TXV and line to the evaporator. For right angle TXV, the capillary tube shall be installed and insulated per the component manufacturer's recommendations.

The orifice tube shall be located as close to the evaporator inlet as possible. The line between the orifice tube and the evaporator shall be insulated.

6.6 Evaporator

6.6.1 Location. The evaporator shall be located to provide for ease of maintenance and replacement.

6.6.2 Air Filtration. A removable air filter should be incorporated to prevent air flow restriction caused by dirt and debris.

6.6.3 Moisture Accumulator and Drainage. A moisture accumulator and drainage system shall be used to remove condensation from the cab.

6.7 Hoses And Tubes. Formed tube assemblies and R-134a compatible hose material will minimize moisture entering and R-134a escaping from the air conditioning system.

6.7.1 Sizes. The hose sizes used in a system should be chosen to ensure proper system performance. In general, the liquid lines between the condenser and evaporator shall be the smallest diameter, the compressor discharge line shall be the next largest, and the suction line between the evaporator and the compressor shall be the largest diameter. All hoses going to and from the compressor should be isolation clamped to the engine to avoid loosening the fittings and to prevent fitting breakage. In all cases, spacing between clamps shall not exceed 18 inches. Isolation clamps should be utilized whenever possible. Avoid using cable ties as the primary clamping device. Always avoid contact with hot surfaces such as the exhaust manifold as well as sharp surfaces which can cause abrasion.

6.7.2 Bend Radius. The vehicle manufacturer is responsible for obtaining and applying information for the minimum bend radius and maximum unsupported length for each type and size hose used in the air conditioner system and ensuring these specifications are not exceeded.

6.8 System Protection and Control Devices. System protection and control devices should be incorporated to monitor and protect system components from abnormal conditions. These conditions are excessive high pressure, low pressure and complete refrigerant loss.

©2003—TMC/ATA

Independent high side high pressure switches and high side low pressure switches should be included in the system, with locations and specific pressure settings per the component manufacturer's recommendations. Refer to 5.9 thru 5.12 for specific switch details.

6.9 System Assembly
Vehicle manufacturers should make every attempt to position A/C components so as to allow minimum inconvenience during engine service.

6.9.1 Preparation. The main components of the air conditioning system are connected via hose assemblies and/or formed tubes. All hose assemblies, tube assemblies, and air conditioner system components shall be contaminant-free, dehydrated and capped as received from the supplier. The caps should have a snug fit to ensure the components stay clean, dry, and that the caps remain installed during shipment and handling. Caps should not be removed until the assembly process occurs. At installation the O-rings shall be lightly lubricated or pre-lubricated with mineral oil. This oil shall be dispensed from a closed container which minimizes exposure to air, moisture, or other contaminants. The mineral oil container should be capped when not in use. To prevent corrosion of fitting threads caused by electrolysis between dissimilar material of the fittings, apply a corrosion inhibiting compound on the fitting threads only (e.g., Dow Moly Coat M-1000). Caution should be used to prevent contamination of the refrigerant system when using any product other than mineral oil. Caution should be used to prevent the loss of refrigerant oil in system components during assembly.

All fittings shall be torqued to appropriate manufacturer's recommendations.

6.10 System Evacuation By OEM

6.10.1 System Leak Check. The original equipment manufacturer (OEM) shall perform a leak check after system assembly and prior to system evacuation and charging.

The leak check can be done by two methods: pressurizing with dry nitrogen, or pulling a vacuum on the air conditioner system. With either method, a short period of time should be allowed to detect system pressure change. Leaks shall be corrected prior to proceeding with evacuation and charge.

6.10.2 System Evacuation. The final system evacuation shall reach a level of vacuum and be held for an adequate period of time, (ideally a minimum of 1500 microns for five (5) minutes) to remove moisture trapped in the system. The evacuation equipment shall be capable of evacuating both the high and low pressure sides of the system simultaneously.

6.11 System Charging By OEM. The correct refrigerant charge and lubrication amounts shall be determined by the vehicle manufacturer and permanently displayed on a label in the engine compartment. This label shall identify the amount of R-134a refrigerant and the type and amount of lubricant oil used in the system. The label color, style, and size shall be per SAE J639. [3]

The vehicle manufacturer should charge with R-134a in the high pressure side of the system while the engine is ***NOT*** running.

CAUTION: This procedure is only for original equipment manufacturers (OEMs). This is ***not*** a service procedure. For field service, refer to Section 7.

6.12 Electrical System Requirements For Air Conditioning System. Weatherproof electrical connectors shall be used on all external harness/component connections.

7. RECOMMENDED PREVENTIVE MAINTENANCE, SERVICE PROCEDURES, DIAGNOSTICS AND REPAIR FOR R-134a SYSTEMS

7.1 Preventive Maintenance Practice. As a preventive maintenance practice, or if system servicing is needed, visual and performance inspection procedures should be followed.

Note: Preventive maintenance inspection should be performed a minimum of once per year.

At regularly scheduled engine oil change intervals, check refrigerant moisture indicator if so equipped (See 7.2.4). If presence of moisture is indicated, recover R-134a and change drier/accumulator. (See 7.5)

©2003—TMC/ATA

At a minimum, change receiver drier/accumulator every two (2) years as part of preventive maintenance program to remove trapped contaminants or debris in the filter.

7.2 Visual Inspection Of R-134a Systems. Refer to **Appendix A**, Air Conditioning Preventive Maintenance Checklist. Identify type of refrigerant system in vehicle by owner's manual, component labels and/or service hose connections (Refer to SAE J1660, *Fittings and Labels for Retrofit of CFC-12 (R12) Mobile Air Conditioning Systems for HFC-134a (R134a)*). [5] R-134a service ports use quick disconnect male charge ports, maximum 10 mm suction side, minimum 12 mm discharge side. Refer to SAE J639. [3]

CAUTION: R-12 and R-134a refrigerants and lubricating oils are not compatible. Make certain of the type of refrigerant in the vehicle. Do not mix refrigerants or oils in systems or equipment used for service of system.

7.2.1 Evaporator and Heater Core. Inspect the evaporator and heater core to see that it is free of debris and oil residue, which may have been drawn through the air inlet. Replace evaporator filter if necessary and applicable. Debris on evaporator or blower motor wheel will impair cooling efficiency and will reduce air flow. Remove debris with an air hose or vacuum hose, using care to prevent possible damage to evaporator fins and other nearby components. Ensure that evaporator drain hose is clear and that there is no presence of refrigerant oil or engine coolant. If oil or coolant is present, check evaporator and heater core for leakage. Visually inspect for oil leaks at expansion valve and evaporator connections. On right angle expansion valves, check for proper mounting and insulation of the sensing bulb to evaporator outlet and ensure kink-free routing of capillary tube.

For sleeper units, follow the same inspections as found in 7.2, checking additional hose and possibly solenoid valves for leakage and poor connections.

7.2.2 Condenser. Inspect the condenser for corrosion, bent fins, oil leakage, or obstruction. These conditions will cause high head pressure, reduce cooling performance, and shorten compressor/clutch life. Inspect mounting hardware for loose or missing bolts. Damaged condensers should be repaired or replaced.

7.2.3 Compressor/Clutch Assemblies. Check for loose nuts and bolts on compressor mounting brackets and clutch. These fasteners should be torqued to vehicle manufacturer specifications. Check for any refrigerant oil leaks at compressor fittings, front seals, and compressor bodies. Check pressure relief valve to determine if venting has occurred. If venting has occurred, check system for possible high low side pressure and/or low high side pressure.

Inspect clutch wire for breakage or poor connection. Inspect armature plate assembly for improper air gaping or discoloration due to excessive heat. Check for loose or damaged springs on armature plate assembly. Check drive belts for glazing, cracking or fraying. Check belts for proper tension and alignment. Refer to manufacturer specifications and 6.1.4. If the compressor is out of alignment, belt wear and clutch bearing failure will result.

7.2.4 Receiver Drier/Accumulator. Check for loose mounting hardware and that the flow through the receiver drier is as indicated by the arrow on drier. Check for refrigerant oil leaks at the inlet and outlet of the receiver drier/accumulator. Check the moisture indicator, if so equipped. If pink, a leak is present and the system contains moisture and acid. Refer to 7.3.1.

Note: Do not rely on sight glass to determine proper charge.

7.2.5 Hoses/Tube Assemblies. Check all hose/tube assemblies for oil leakage, cracking or chafing. Check all hose insulators, abrasion protectors, isolators or mounting hardware for proper location, integrity and loose bolts.

7.2.6 Electrical System. Check all electrical connections, wires and contacts at all switches and termination points for corrosion, breakage, fraying and looseness. Repair or replace as necessary.

7.3 Performance Testing and System Diagnosis

CAUTION: R-134a systems must have dedicated service equipment.

©2003—TMC/ATA

Dedicated service equipment includes: manifold gauge sets, evacuating and charging equipment, recovery/recycling equipment, and leak detectors or any equipment coming in contact with R-134a refrigerant and its oil.

7.3.1 Diagnostic Procedure

- It is important that mechanics are made aware of the proper operation of all other air conditioning service equipment. This information may be found in equipment operating manuals as well as service manuals.

- Check for proper belt alignment and tension per vehicle manufacturer's recommended specifications.

- Operate the air conditioning system with the engine at 1200 - 1500 RPMs. Check high and low pressure gauge readings to ensure operation is within the vehicle manufacturer's specifications.

  If the gauge readings are lower than the vehicle manufacturer's specifications, or visual evidence of refrigerant leakage is found, leak testing is recommended. Check for leaks utilizing industry approved leak detection devices (per SAE J1627, *Rating Criteria for Electronic Refrigerant Leak Detection*), [6], and if detected, recover the refrigerant and repair as necessary (per SAE J1628, *Technician Procedure for Using Electronic Refrigerant Leak Detectors for Service of Mobile Air Conditioning Systems.*). [7]

- Verify that the clutch engages and disengages properly. When engaged, check for minimum 11.5 volts for 12-volt system to ensure proper clutch engagement and prevent premature clutch coil failure. Voltage measurements should be taken after the system has been operating for 5 minutes with the blower on high speed and clutch engaged. If the clutch will not engage, refer to vehicle manufacturer's manuals or schematic for troubleshooting.

- Check for abnormal noise, heat, or vibration in compressor/clutch assembly.

- All discharge/high side hoses, tubes, and components should be hot to the touch and free of frost. Frost on these components or lines indicates a restriction at the point of frost. All suction/low side hoses, tubes, and components should be cool to the touch.

- Check air flow and temperature through outlet vents and proper operation of dashboard controls. The use of a thermometer will aid in the evaluation of the system. If proper air flow, temperature, and gauge readings are not achieved, further testing and diagnosis is required.

- Low air flow volume may be the result of duct restrictions, malfunctioning duct doors, defective blower motor and/or controls. Fresh air inlet restrictions may reduce outlet air flow.

- Air duct temperatures may be affected by the heater system. Make certain hot engine coolant is not circulating through the heater core during air conditioning system operation. For electronic temperature control systems, check vehicle manufacturer's specifications for proper heater control valve operation.

7.4 Troubleshooting. If the air conditioning system exhibits:

7.4.1 Intermittent Cooling. May be due to:

a. Moisture in the system freezing at the expansion valve
b. Faulty thermostat causing evaporator freeze-up
c. Intermittent electrical malfunction
d. Blend air door is open

7.4.2 Insufficient Cooling. May be due to:

a. Low refrigerant level
b. Moisture in the system
c. Compressor clutch or belt slippage
d. Condenser air flow restrictions
e. Improper fan clutch operation
f. Partial high side restriction
g. Faulty thermostat
h. Inadequate air flow (Refer to 7.3.1)
i. Blend air door is open

7.4.3 Failure To Cool. May be due to:

a. Low or no refrigerant
b. High side restriction
c. Air flow restriction
d. Compressor/clutch failure

©2003—TMC/ATA

e. Broken drive belt
f. Faulty expansion valve incompatible refrigerant or oil in system
g. Electrical component malfunctions

7.5 Service Procedures

7.5.1. If repair procedure requires discharging of the system, recover the refrigerant utilizing SAE/UL approved equipment.

7.5.2. In the event of compressor failure, desiccant breakdown, or loss of an unknown amount of lubricating oil, flushing of the system is required.

7.5.2.1. The following components must be flushed prior to system reassembly: evaporator, condenser, hoses, tubing and fittings.

7.5.2.2. Do not flush the following: orifice tubes, compressors, expansion valves, receiver driers, and accumulators.

7.5.2.3. All components must be reverse flushed.

7.5.3 It is imperative that the following cautions be observed due to polyalkylene glycol (PAG) oil having extremely high moisture absorption capabilities.

7.5.4 Cap all lines and components while system is open. Caps should remain in place until immediately before assembly.

7.5.5 O-rings should be lubricated with refrigerant oil at the time of assembly. DO NOT lubricate component threads with refrigerant oil.

7.5.6 All components used for replacement in an R-134a system must be compatible with R-134a.

7.5.7 It is recommended that any time the system is opened for repair or servicing, the receiver drier/accumulator should be changed. The receiver drier/accumulator should be the last component installed prior to evacuation.

7.5.8 Keep refrigerant oil in a sealed container in a dry location. The oil will become moisture contaminated if exposed to the atmosphere for even a short period of time.

7.5.9 The system ***must*** contain the proper volume of oil. To determine this, the following steps must be followed:

1. Determine system oil volume as noted on the vehicle manufacturer's system label.

2. Determine the amount of oil in the compressor to be used. If a dipstick method of checking the oil is unavailable, drain and measure the oil.

3. Flush the system to remove all residual oil from the reusable components and lines.

4. Add sufficient oil to the compressor to comply with the vehicle manufacturer's system label.

CAUTION: Be sure proper type and viscosity of PAG or ester oil is being used as specified by the compressor manufacturer.

7.5.10 After system reassembly, a leak test must be performed. Evacuate the system for five (5) minutes and install one lb. of R-134a refrigerant. Check for leaks utilizing industry approved leak detection devices. If a leak is found, recover the refrigerant and repair as necessary. If no leaks are found, recover the refrigerant and proceed with system evacuation and charge.

7.5.11 Evacuate to a minimum of 29 inches Hg vacuum for a minimum of one hour.

7.5.12 Using new or properly recycled R-134a and utilizing the proper charging equipment, charge the system in accordance with the vehicle manufacturer's specifications.

7.5.13 Check the gauge readings to ensure proper operating pressures. See **Table 1**. Readings should be within the vehicle manufacturer's recommended pressure ranges. A leak test at system pressures is recommended prior to disconnecting the gauges.

7.5.14 After removal of the gauges, check for leaks at the service ports. If a leak is found, evacuate the system and repair as necessary. If no leaks are found, replace the service port caps.

7.5.15 Road test the vehicle for air conditioning system performance.

©2003—TMC/ATA

8. REFERENCES

[1] SAE J1308, *Fan Guard for Off-Road Machines,* Society of Automotive Engineers, Inc., 400 Commonwealth Drive, Warrendale, PA 15096-0001.

[2] SAE J2064, *R134a Refrigerant Automotive Air Conditioning Hose,* Society of Automotive Engineers, Inc., 400 Commonwealth Drive, Warrendale, PA 15096-0001.

[3] SAE J639, *Safety and Containment of Refrigerant for Mechanical Vapor Compression Systems Used for Mobile Air Conditioning Systems,* Society of Automotive Engineers, Inc., 400 Commonwealth Drive, Warrendale, PA 15096-0001.

[4] SAE J1662, *Compatibility of Retrofit Refrigerant with Air Conditioning System Materials,* Society of Automotive Engineers, Inc., 400 Commonwealth Drive, Warrendale, PA 15096-0001.

[5] SAE J1660, *Fittings and Labels for Retrofit of CFC-12 (R12) Mobile Air Conditioning Systems for HFC-134a (R134a),* Society of Automotive Engineers, Inc., 400 Commonwealth Drive, Warrendale, PA 15096-0001.

[6] SAE J1627, *Rating Criteria for Electronic Refrigerant Leak Detection*), Society of Automotive Engineers, Inc., 400 Commonwealth Drive, Warrendale, PA 15096-0001.

[7] SAE J1628, *Technician Procedure for Using Electronic Refrigerant Leak Detectors for Service of Mobile Air Conditioning Systems,* Society of Automotive Engineers, Inc., 400 Commonwealth Drive, Warrendale, PA 15096-0001.

TABLE 1

PRESSURE TEMPERATURE CHART

°F	°C	HFC-134a (psi)	CFC-12 (psi)	°F	°C	HFC-134a (psi)	CFC-12 (psi)
-60	-51.1	21.8	19.0	55	12.8	51.1	52.0
-55	-48.3	20.4	17.3	60	15.6	57.3	57.7
-50	-45.6	18.7	15.4	65	18.3	63.9	63.8
-45	-42.8	16.9	13.3	70	21.1	70.9	70.2
-40	-40.0	14.8	11.0	75	23.8	78.4	77.0
-35	-37.2	12.5	8.4	80	26.7	88.4	84.2
-30	-34.4	9.8	5.5	85	29.4	94.9	91.8
-25	-31.7	6.9	2.3	90	32.2	103.9	99.8
-20	-28.9	3.7	0.6	95	35.0	113.5	108.3
-15	-26.1	0.0	2.4	100	37.8	123.6	117.2
-10	-23.3	1.9	4.5	105	40.6	134.3	126.6
-5	-20.6	4.1	6.7	110	43.3	145.3	136.4
0	-17.8	6.5	9.2	115	46.1	157.6	146.8
5	-15.0	9.0	11.8	120	48.9	170.3	157.7
10	-12.2	12.0	14.6	125	51.7	183.6	169.1
15	-9.4	15.0	17.7	130	54.4	197.6	181.0
20	-6.7	18.4	21.0	135	57.2	212.4	193.5
25	-3.9	22.1	24.6	140	60.0	227.9	206.6
30	-1.1	26.1	28.5	145	62.8	244.3	220.3
35	1.7	30.4	32.6	150	65.6	261.4	234.6
40	4.4	35.0	37.0	155	68.3	279.5	249.5
45	7.2	40	41.7	160	71.1	298.4	265.1
50	10.0	45.3	46.7	165	73.9	318.3	281.4

*Pressures indicated below -15°F for HFC-134a (R-134a) and below -20°F for CFC-12 (R-12) are inches of vacuum. At higher temperatures, pressures are vapor pressure per square inch.

©2003—TMC/ATA

APPENDIX A
AIR CONDITIONING PREVENTIVE MAINTENANCE CHECKLIST

Unit No._____ **Chassis No.**_____ **Year**_____ **Make** _____ **Model** _____

VISUAL	Pass	Fail
1. Refrigerant hoses	❑	❑
2. Condenser coil	❑	❑
3. Electrical wiring	❑	❑
4. Drive belts	❑	❑
5. Compressor	❑	❑
6. Evaporator drain hose	❑	❑
COOLING SYSTEM		
1. Heater valves	❑	❑
2. Coolant hoses	❑	❑
3. Radiator	❑	❑
4. Fan drive	❑	❑
5. Radiator shutters	❑	❑
6. System pressure	❑	❑

ELECTRICAL	Pass	Fail
1. Blower switches	❑	❑
2. Evaporator blowers	❑	❑
3. Thermo. dash control	❑	❑
4. System voltage _____ volts	❑	❑
5. Solenoid valves	❑	❑
6. High pressure switch (psi)	❑	❑
_____ cut-out _____cut-in		
7. Low pressure switch (psi)	❑	❑
_____ cut-out _____ cut-in		
8. Override switch (psi)	❑	❑
_____ engage _____ disengage		
SYSTEM PERFORMANCE		
1. Initial system pressure (engine off)	❑	❑
_____ high side _____low side		
2. Running system pressure (engine on)	❑	❑
_____ high side _____ low side		
3. Duct outlet temperatures (°F)	❑	❑
_____ duct _____ ambient		

SERVICE PERFORMED

_____

_____

_____

_____

_____

COMMENTS

_____

_____

_____

©2003—TMC/ATA