TMC Recommended Practice

RP 609B **VMRS 013-001, 013-002**

SELF-ADJUSTING AND MANUAL BRAKE ADJUSTER REMOVAL, INSTALLATION AND MAINTENANCE

PREFACE

The following Recommended Practice is subject to the Disclaimer at the front of TMC's *Recommended Maintenance Practices Manual.* Users are urged to read the Disclaimer before considering adoption of any portion of this Recommended Practice.

PURPOSE AND SCOPE

The purpose of this Recommended Practice (RP) is to provide information regarding the removal, installation, operation, maintenance, and selection of heavy-duty vehicle manual and self-adjusting brake adjusters.

INTRODUCTION

In an S-cam type foundation brake, the final link between the pneumatic system and the foundation brake is the brake adjuster. The arm of the brake adjuster is fastened to the push rod of the chamber with a clevis and the spline end is installed on the brake camshaft. Primarily, the brake adjuster is a lever that converts the linear force of the air chamber push rod into a torque which turns the brake camshaft and applies the brakes.

Two types of brake adjusters are in use: manual type brake adjusters, which periodically require a manual adjustment; and self-adjusting brake adjusters, which automatically adjust during normal service braking applications. All brake adjusters use the worm and gear principle and fundamentally differ only in their torque limit specification.

NOTE: Manual and self-adjusting brake adjusters are for brake adjustment and will not compensate for normal wear characteristics and maintenance requirements associated with foundation brakes.

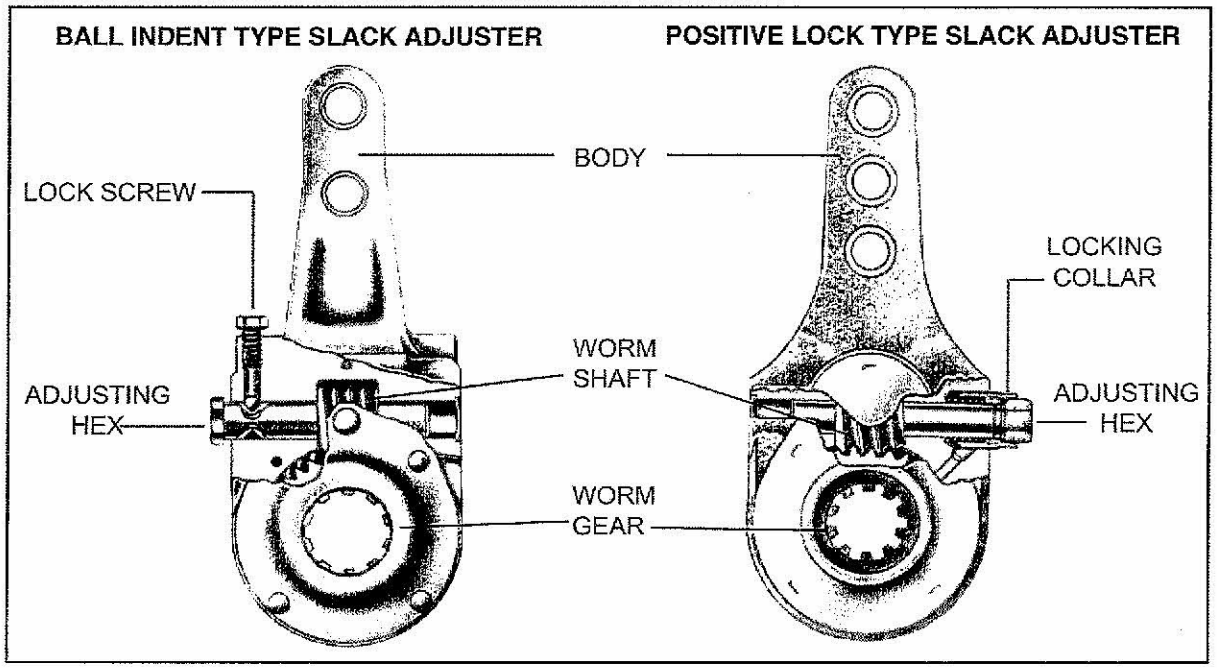

Fig. 1: Manual Brake Adjusters

© 2002—TMC/ATA

Issued 3/80
Revised 3/2002

MANUAL BRAKE ADJUSTERS

Manual brake adjusters contain four basic components: the body, worm gear, worm shaft, and locking screw or collar. See **Fig. 1.**

The worm shaft of a brake adjuster incorporates an external adjusting hex. Turning the adjusting hex rotates the worm shaft which turns the worm gear and brake cam shaft, thus spreading the brake shoes and reducing drum-to-lining clearance.

Light to medium gross axle weight rating (GAWR) vehicles utilize either a spring-loaded locking sleeve or a lock ball indent adjustment lock to prevent the worm shaft from backing off.

Higher torque-rated brake adjusters use the lock ball or plunger and worm shaft indent principle adjustment lock. The lock ball or plunger must engage the worm shaft indent after the adjustment is completed. An audible metallic click can be heard when engagement is made.

SELF ADJUSTING BRAKE ADJUSTERS

While self-adjusting brake adjuster designs vary in the manner in which they are installed and operate, all are designed to automatically maintain a predetermined drum-to-lining clearance or brake chamber stroke. Some self-adjusting brake adjusters adjust upon the brake application stroke, others adjust upon release. Self-adjusting brake adjusters should not have to be manually adjusted while in service. However, manual adjustments can be made temporarily to get a vehicle to a maintenance facility for inspection and repair, if necessary.

⚠ CAUTION Self-adjusting brake adjusters do not eliminate or reduce the need for periodic inspection and maintenance of the adjuster components and attaching hardware. Self-adjusting brake adjusters should never be operated as a manual adjuster, if the self-adjusting function is not operating properly.

BRAKE ADJUSTER REPLACEMENT

When replacing a brake adjuster, it is recommended that the replacement be of the same size as the original equipment. All self-adjusting brake adjusters on a vehicle should be made by the same manufacturer. To identify the proper replacement, the following slack adjuster key dimensional checks are recommended.

- Arm length (center of spline to center of arm hole to be used).
- Type, width, number, and diameter of splines.
- Clevis pin diameter (do not drive out bushing to accommodate a larger clevis pin).
- Brake chamber push rod size (5/8" or 1/2").
- If offset configuration, determine the offset dimension (right or left side).

BRAKE ADJUSTER REMOVAL AND INSTALLATION

⚠ WARNING: To avoid possible injury, proper precautions must be taken to prevent automatic actuation of the brake chambers while removing or installing slack adjusters. Always block the wheels or mechanically secure the vehicle. Spring brakes must be mechanically caged. All brakes should be released.

A. Manual Brake Adjuster Removal—

1. Remove the brake chamber push rod clevis pin.
2. Remove the retaining mechanism from the end of the brake camshaft.
3. Rotate the adjusting hex to back the brake adjuster out of the clevis.
4. Remove the brake adjuster from the spline end of the brake cam shaft.

B. Manual Brake Adjuster Installation—

1. Install the brake adjuster on the cam shaft so the adjustment hex and grease fitting (if so equipped) are accessible for servicing.
2. Align the brake adjuster arm with center of the push rod clevis. Install the clevis pin and secure it with a new cotter pin.
3. Check to be sure the angle formed by the brake adjuster arm and the brake chamber push rod is greater than 90° when the brake adjuster is in the released position.
4. Install the brake adjuster retaining mechanism on the end of the brake cam shaft, being sure to shim it to less than 0.060 inch of end play.
5. Tighten the jam nut on the push-rod-to-clevis attachment (1/2 - 20 300-400 in. lbs. 5/8 - 18 400 in. lbs.).
6. After installation, make certain there is adequate clearance in both the fully applied and fully released positions. Check to ensure that all brake adjusters rotate freely and without binding.
7. Adjust the brakes by following the procedure in the section entitled BRAKE ADJUSTMENT PROCEDURE.

© 2002—TMC/ATA

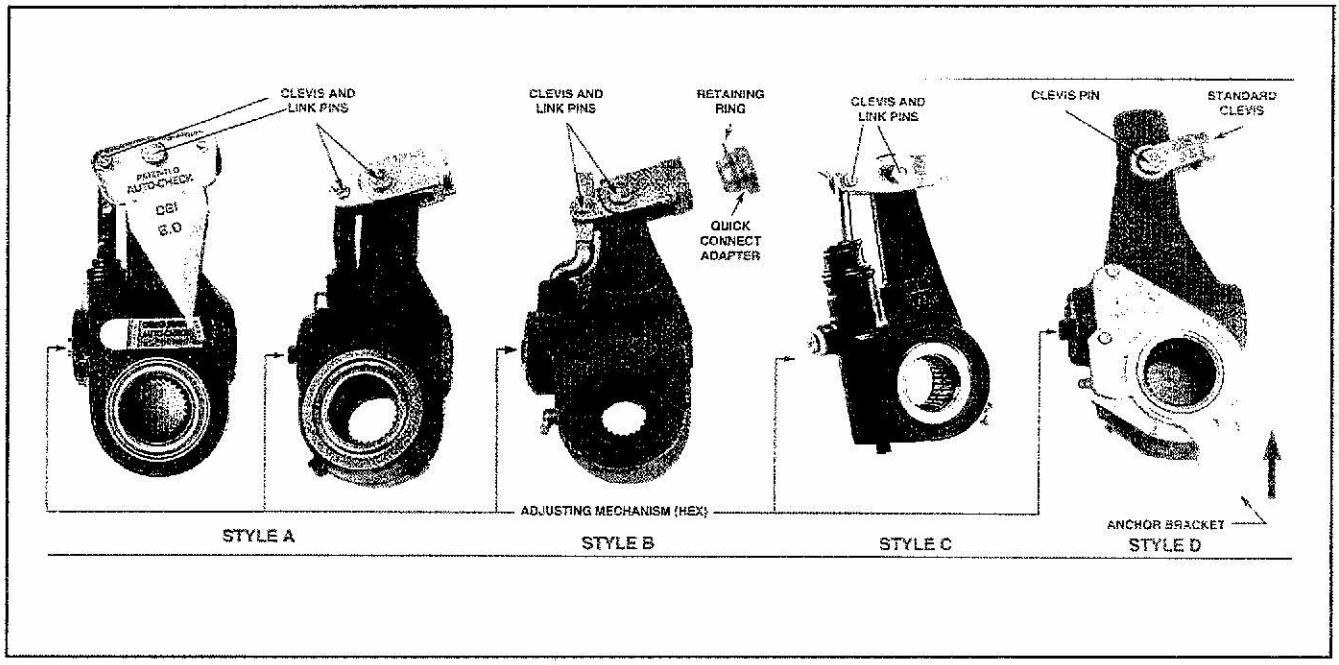

Fig. 2: Self-Adjusting Brake Adjuster Types

C. Self-Adjusting Brake Adjuster Removal—

1. Remove the clevis and link pins and the anchor bracket nut or pawl, if necessary (see **Fig. 2**).
   a. Style A—Remove the clevis and link pins.
   b. Style B—Remove the retaining ring quick connect yoke.
   c. Style C—Remove the pawl, clevis, and link pins.
   d. Style D—Remove the clevis pin and anchor bracket nuts.
2. Remove the retaining mechanism from the end of the brake cam shaft.
3. Rotate the adjusting mechanism to back the self-adjusting brake adjuster out of the clevis, if necessary.
4. Remove the self-adjusting brake adjuster from the spline end of the brake cam shaft.

NOTE: If a manual brake adjuster is being removed to be replaced with a self-adjusting brake adjuster, the manual or threaded clevis must be removed from the brake chamber push rod (with Style D self-adjusting brake adjuster, the existing clevis is used and additional anchor bracket hardware is required). Leave the jam nut on the push rod.

D. Self-Adjusting Brake Adjuster Installation—

1. Ensure that the brake chamber is installed in the bracket holes appropriate for the self-adjusting brake adjuster arm length.
2. Clean the camshaft splines.
3. Coat the camshaft splines and the end of the brake chamber push rod with an anti-seize type product.
4. Install either a quick connect nut or threaded clevis on the brake chamber push rod per the manufacturer's recommendations. Some manufacturers offer both quick connect and threaded clevises.
5. Install the self-adjusting brake adjuster on the camshaft.
6. Install the self-adjusting brake adjuster retaining mechanism on the end of the brake cam shaft, being sure to shim it to less than 0.060 inch of end play.

7A. Rotate the adjusting mechanism to either install a clevis and link pin or to connect the clevis with a quick connect nut (see **Fig. 2**, Styles A, B, and C).

7B. For Style D, install the anchor bracket loosely and then rotate the adjusting mechanism to install the clevis pin.

8A. Using the correct gauge or template, (see **Fig. 2**, Styles A, B, and C) check for the proper mounting angle. Adjust the clevis for the correct angle, if necessary.

© 2002—TMC/ATA

NOTE: The brake chamber push rod may require shortening or replacement to obtain the proper installation length.

8B. Make sure the control arm is bottomed out in the direction of the arrow or if the control arm has a pointer, align with the cut-out gap provided (see **Fig. 2**, Style D) and then secure all anchor bracket hardware.

9. Tighten the jam nut.
10. After installation, make a brake application to make certain there is no interference between the axle and the suspension components in both fully applied and fully released positions. Check to ensure that the brake adjusters rotate freely and without binding.
11. Adjust the brakes following the procedure in the section entitled BRAKE ADJUSTMENT PROCEDURE, below.

BRAKE ADJUSTMENT PROCEDURE

NOTE: All adjustments should be made with cold brake drums and the brakes fully released.

⚠ WARNING: To avoid possible injury, proper precautions must be taken to prevent automatic actuation of the brake chambers while adjusting brake adjusters. Always block the wheels or mechanically secure the vehicle. Spring brakes must be mechanically caged or released with air. All brakes should be released.

A. ManualBrake Adjuster
Brake Adjustment Procedure—

1. **Brake adjusters with locking collar (positive lock type)—**Jack up the vehicle. Thoroughly clean the adjusting hex and locking sleeve area. Position a wrench or socket over the adjusting hex and disengage the locking sleeve by depressing it. With the locking sleeve fully depressed, adjust the brakes while rotating the tire and wheel. Use the wrench or socket to turn the adjusting hex until the shoes contact the drum. Then back off the adjusting hex until the tire and wheel turn freely. The actuator stroke should be as short as possible without the brakes dragging.

   If the vehicle cannot be jacked up, thoroughly clean the adjusting hex and locking sleeve area. Position a wrench or socket over the adjusting hex and disengage the locking sleeve by depressing it. With the locking sleeve fully depressed, use the wrench or socket to turn the adjusting hex until it will go no further indicating that either the shoes have contacted the drum or the adjusting hex has been turned in the wrong direction. Pull on the brake adjuster to make sure it will not move. If there is movement, adjustment was made in the wrong direction and the adjusting hex must be turned in the opposite direction until it will go no further. After establishing solid shoe-to-drum contact, back off the adjusting hex 1/4 turn for worn linings and 1/2 turn when relining brakes. The actuator stroke should be as short as possible without the brakes dragging. Measure the chamber power stroke at 90-100 psi as described in subsection "B," "Self-Adjusting Brake Adjuster Brake Adjustment Procedure," below. Take a free stroke measurement as outlined in the section entitled FAILURE ANALYSIS. Ensure there is at least 3/8"

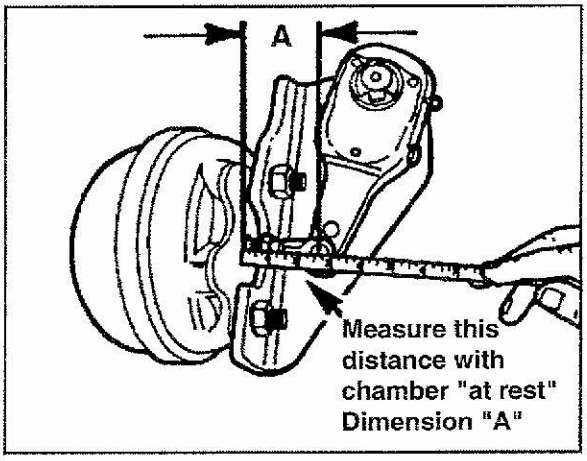

Fig. 3

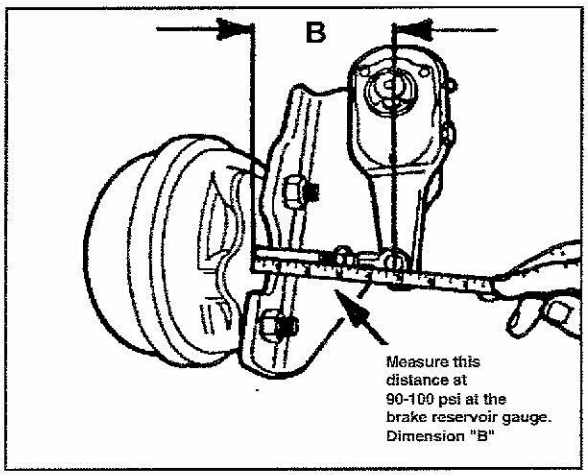

Fig. 4

© 2002—TMC/ATA

TABLE 1

CHAMBER TYPE VS. MAXIMUM LEGAL STROKE AT 90-100 PSI BRAKE APPLICATION PRESSURE	
Chamber Type	**Maximum Legal Stroke**
12	1-3/8" or less
12 Long Stroke	1-3/4" or less
16	1-3/4" or less
16 Long Stroke	2.0" or less
20	1-3/4" or less
20 Long Stroke	2.0" or less
24	1-3/4" or less
24 Long Stroke	2.0" or less
24 Extra Long Stroke	2.5" or less
30	2.0" or less
30 Long Stroke	2.5" or less
36	2-1/4" or less

of free stroke. Free stroke less than 3/8" can cause brake drag. If you can't maintain maximum legal stroke and the free stroke is less than 3/8", contact the brake manufacturer for foundation or brake geometry problems.

⚠ CAUTION: When the manual brake adjuster brake adjustment is completed, the adjusting hex should be positioned so the locking sleeve engages it, thus locking it in place. If the locking sleeve does not engage the adjusting hex, the brake adjuster can back itself off.

2. **Brake adjuster with lock screw ball Indent type lock mechanism**—Back off (turn counterclockwise) the worm shaft lock screw (if applicable). Make the necessary adjustment by turning the adjusting hex as described in item number 1 of this section. Following brake adjustment, make certain that the lock ball or plunger engages the worm shaft indent. Without such engagement, the slack adjuster can back itself off.

B. Self-Adjusting Brake Adjuster Brake Adjustment Procedure—

A self-adjusting brake adjuster should not have to be manually adjusted except for initial installation and at brake reline. Instead of manually adjusting the slack, perform the following procedure during inspection:

Chamber Power Stroke: A power stroke at 90-100 psi brake application pressure will check both adjustment and foundation brake condition. Perform the following:

1. Measure from the brake chamber face to the center of the clevis pin at all wheel locations (see **Fig. 3).**
2. Make brake applications until the air reservoir gage reads 90-100 psi. Then have an assistant make a full brake application and hold it.
3. Measure from the brake chamber face to the center of the clevis pin (see **Fig. 4).**
4. The difference between the brakes released and applied measurements is the power stroke measurement. If the stroke is less than the maximum stroke for the chamber size (see **Table 1),** the inspection is complete. If the power stroke is more than the maximum stroke for the chamber size (see **Table 1**), refer to the section entitled FAILURE ANALYSIS.

SELF-ADJUSTING BRAKE ADJUSTER ADJUSTMENT PROCEDURE AT RELINE AND INSTALLATION

A self-adjusting brake adjuster should be manually adjusted after a brake reline and/or installation using the following procedure:

1. Position a wrench or socket over the adjusting mechanism.

   NOTE: If the self-adjusting brake adjuster is equipped with a pawl, remove the pawl for the brake adjustment and then properly reinstall the pawl (see **Fig. 2**, Style C) . Tighten the pawl to 15 - 20 ft.-lbs.

2. Rotate the adjusting mechanism until the brake shoes contact the drum. Pull on the brake adjuster by hand to make sure it will not move. If there is movement, adjustment was made in the wrong direction and the adjusting hex must be turned in the opposite direction until it will go no further.
3. Reverse the rotation, backing the brake adjuster off one-half (1/2) turn.
4. Measure the chamber power stroke at 90-100 psi brake application pressure as described in the previous section.
5. Take a free stroke measurement as outlined in the section entitled FAILURE ANALYSIS. Make sure you have at least 3/8" free stroke. Free stroke of less than 3/8" can cause brake drag. If you cannot maintain the maximum legal stroke and the free stroke is less than 3/8", contact the brake manufacturer for foundation or brake geometry problems.

© 2002—TMC/ATA

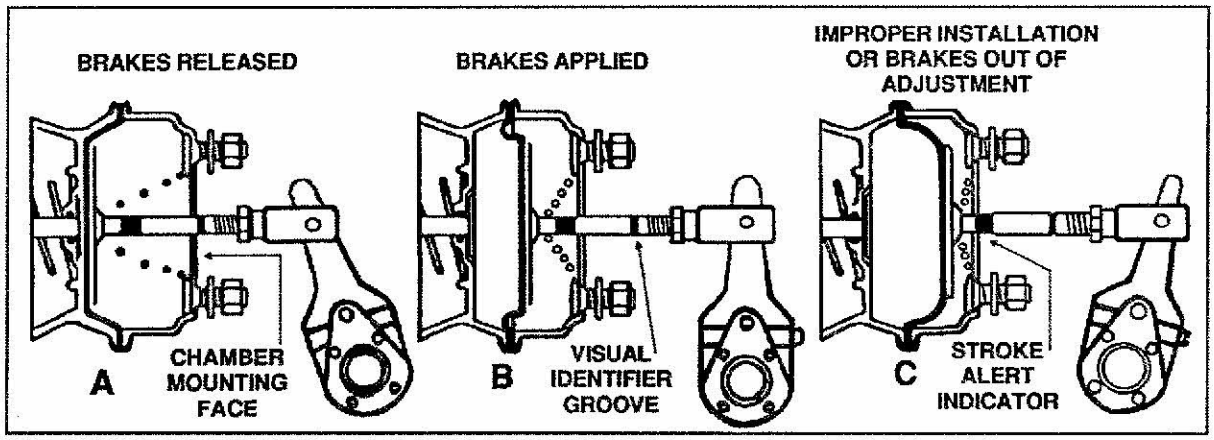

Fig. 5

ROADSIDE BRAKE ADJUSTMENT

If the driver has to adjust brakes on the road, the following procedure is recommended:

If the vehicle is equipped with an self-adjusting brake adjuster, use a pry bar to pull on the brake adjuster. If movement is more than 5/8", a manual adjustment should be made following the same procedure as described below for a manual brake adjuster. If the self-adjusting brake adjuster is equipped with a pawl remove the pawl for the brake adjustment and then properly reinstall the pawl. If the self-adjusting brake adjuster needs adjustment, inform maintenance personnel.

1. Block the wheels or mechanically secure the vehicle. On the brakes to be adjusted, spring brakes must be mechanically caged or released with air.
2. Rotate the adjusting mechanism until the brake shoes contact the drum. Using a pry bar, pull on the brake adjuster by hand to make sure it will not move. If there is movement, adjustment was made in the wrong direction and the adjusting mechanism must be turned in the opposite direction. Tap the brake drum with a wrench; you should hear a dull clunk indicating the brake linings are tight against the drum.
3. Back off the brake adjuster a small amount at a time, while tapping on the brake drum with a wrench in between adjustments. Stop backing off the adjuster when you hear a clear ringing sound from the brake drum when tapped with a wrench.
4. Using a pry bar, pull on the slack adjuster by hand. If movement is more than 5/8", adjustment was not done properly or there is a problem with the foundation brake.

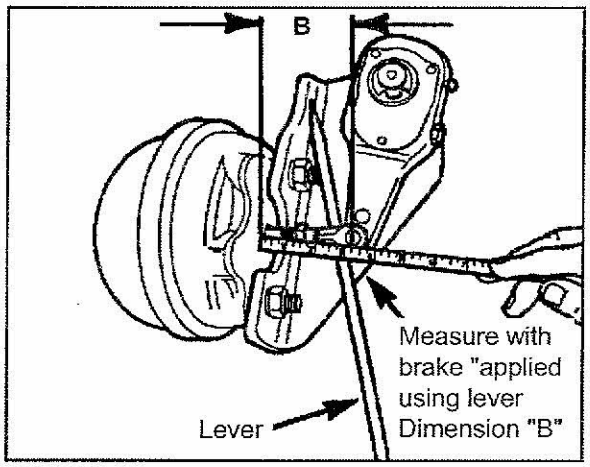

Fig. 6

NOTE: Some brake chamber push rods are marked to warn of an over-stroke condition. While the marking themselves may vary, the marking system has two basic features. They are: There is a mark on the brake chamber push rod near its clevis attachment to signal that it incorporates a stroke alert indicator (see **Fig. 5,** diagram B). There also is a mark on the brake chamber push rod opposite its clevis attachment end which is exposed from the brake chamber wherever over-stroke occurs (see **Fig. 5,** diagram C).

FAILURE ANALYSIS

Manual Brake Adjuster Failure Analysis—Manual slack adjusters should be inspected for gear set wear. To do this, back off the adjusting hex until all

© 2002—TMC/ATA

spring pressure is relieved from the clevis. Work the adjusting nut 1/4 turn back and forth while watching for cam rotation. If you have 1/8 to 1/4 turn of play without the cam rotating, the manual brake should be replaced. Repeat this procedure every 1/4 turn of the adjusting nut to check the whole gear set.

Self-Adjusting Brake Adjuster Failure Analysis— If the power stroke is at or more than the maximum stroke, measure free stroke and check/inspect the adjuster components and attaching hardware to determine if the slack adjuster is operational.

FREE STROKE MEASUREMENT

Free stroke is the amount of brake arm movement required to move the brake shoes against the drum. To measure free stroke, perform the following:

1. With the brakes released, measure from the brake chamber face to the center of the clevis pin.
2. With a lever, pry the brake adjuster arm until the brake shoes contact the drum and measure the brake adjuster movement (see **Fig. 6**).
3. The difference between the brake released and applied measurements is the free stroke. The free stroke should be 3/8" - 5/8". If the free stroke is in the correct range, the out of spec stroke is due to a foundation brake problem. Check for missing or worn components, cracked brake drums, or improper lining-to-drum contact. If the free stroke is greater than recommended, a self-adjusting brake adjuster function test should be performed.

SELF-ADJUSTING BRAKE ADJUSTER FUNCTION TEST

1. Remove the pawl, then rotate the adjusting mechanism at least one complete turn as if backing off the brake adjustment (see **Fig. 2**, Style C). The pawl must be installed properly and tightened to 15 - 20 ft-lbs after backing off the adjuster.
2. Apply the brakes several times and observe whether the adjustment mechanism is rotating in the direction needed to reduce brake chamber pushrod stroke. If the adjusting mechanism does not rotate, the brake adjuster should be replaced.
3. Check back-off torque by rotating the adjusting hex as follows (see **Fig. 2**):
   - Style A: Minimum 15 ft-lbs counter clockwise (CCW)
   - Style B: Minimum 15 ft-lbs CCW
   - Style C: Less than 45 in-lbs CCW (pawl removed)
   - Style D: Minimum 15 ft-lbs CCW

Consult the manufacturer for more information.

PREVENTIVE MAINTENANCE

Every month, 8,000 miles, or 300 operating hours, check brake chamber push rod travel;chamber stroke should be in compliance with the maximum allowable adjusted strokes indicated in Table 1, without the brakes dragging or the pushrod binding. Adjust manual slacks if necessary. Due to different operating conditions, adjustments may be necessary at earlier intervals.

Every 6 months, 50,000 miles, or 1,800 operating hours, lubricate all brake adjusters and clevis pins with manufacturer's recommended lubricant. Check for worn clevises, clevis pins, clevis pin bushings, and worn or broken control arm/attaching brackets. Failure to replace worn, broken, or disconnected components will increase chamber stroke. Lubrication and inspection may be necessary at earlier, intervals due to different operating conditions.

© 2002—TMC/ATA